C.H. RTE.	SECTION	COUNTY	TOTAL SHEETS	SHEET NO.
46	08-00133-01-BR	KANE	87	1
	ILLINOIS	CONTRACT NO.		

PRELIMINARY SET (75%)

FOR INDEX OF SHEETS, SEE SHEET NO. 2

PROJECT LOCATED IN HAMPSHIRE TOWNSHIP

STATE OF ILLINOIS
DEPARTMENT OF TRANSPORTATION
DIVISION OF HIGHWAYS

PLANS FOR PROPOSED FEDERAL AID HIGHWAY

C.H. 46 (WALKER ROAD) OVER BURLINGTON CREEK BRIDGE REPLACEMENT SECTION 08–00133–01–BR PROJECT BROS–0089(158) HAMPSHIRE TOWNSHIP KANE COUNTY JOB NO. P–91–272–09

LOCATION OF SECTION INDICATED THUS: –

TRAFFIC DATA
2010 ADT = 950
2040 ADT = 6,000

DESIGN/POSTED SPEED
POSTED SPEED: 55 MPH
DESIGN SPEED: 60 MPH

DESIGN DESIGNATION
MINOR COLLECTOR (NON–URBAN)

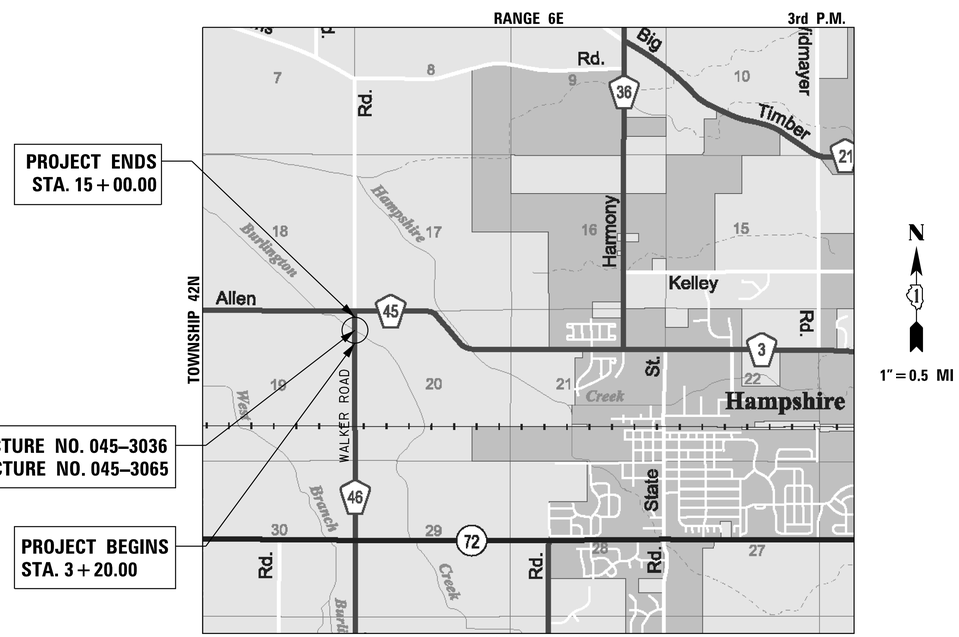

HAMPSHIRE TOWNSHIP
PROJECT NET AND GROSS LENGTH = 1180 FT (0.223 MILE)
PROJECT LOCATED IN:
PARTS OF SECTION 19 AND 20 IN TOWNSHIP 42N, RANGE 6E,
OF THE THIRD PRINCIPAL MERIDIAN, KANE COUNTY, ILLINOIS

STATE OF ILLINOIS
DEPARTMENT OF TRANSPORTATION
DIVISION OF HIGHWAYS

APPROVED _____
COUNTY ENGINEER, KANE COUNTY

PASSED _____
DISTRICT 1 ENGINEER OF LOCAL ROADS & STREETS

RELEASING FOR BID BASED ON LIMITED REVIEW _____
DEPUTY DIRECTOR OF HIGHWAYS, REGION 1 ENGINEER

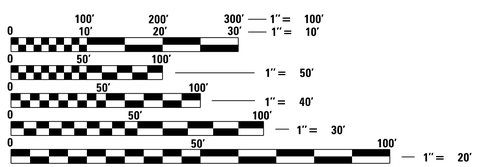

FULL SIZE PLANS HAVE BEEN PREPARED USING STANDARD ENGINEERING SCALES. REDUCED SIZED PLANS WILL NOT CONFORM TO STANDARD SCALES. IN MAKING MEASUREMENTS ON REDUCED PLANS, THE ABOVE SCALES MAY BE USED.

J.U.L.I.E.
JOINT UTILITY LOCATION INFORMATION FOR EXCAVATION
1–800–892–0123
OR 811

_____ 20 _____

PAUL J. FITPATRICK
ILLINOIS REG. PROFESSIONAL ENGINEER NO. 062–047637
EXPIRATION DATE 11–30–2015

WILLS BURKE KELSEY ASSOCIATES LTD.
116 West Main Street, Suite 201
St. Charles, Illinois 60174

PRINTED BY THE AUTHORITY OF THE STATE OF ILLINOIS

PROGRAM AND OFFICE ENGINEER: CHARLES F. RIDDLE, P.E. (847) 705–4406 SCHAUMBURG, IL

CONTRACT NO.

GENERAL NOTES

1. ALL CONSTRUCTION SHALL BE IN CONFORMANCE WITH THE APPLICABLE REQUIREMENT SET FORTH IN "THE CONSTRUCTION SPECIFICATIONS FOR ROAD AND BRIDGE CONSTRUCTION" ADOPTED JANUARY 1, 2012 THEREINAFTER REFERRED TO AS STANDARD SPECIFICATIONS, THE LATEST EDITION OF THE "ILLINOIS MANUAL ON UNIFORM MANUAL TRAFFIC CONTROL DEVICES FOR STREETS AND HIGHWAYS" IN EFFECT ON THE DATE OF INVITATION FOR BIDS; THE "SUPPLEMENTAL SPECIFICATIONS AND RECURRING SPECIAL PROVISIONS" LATEST EDITION; INTERIM SPECIAL PROVISIONS AS INCLUDED IN THE CONTRACT DOCUMENTS; AND THE DETAILS AND STANDARDS CONTAINED IN THESE PLANS.

2. BEFORE STARTING ANY EXCAVATIONS, THE CONTRACTOR SHALL CALL "JULIE" AT 1-800-892-0123 FOR FIELD LOCATIONS OF BURIED ELECTRIC, TELEPHONE AND GAS FACILITIES. (48 HOUR NOTIFICATION IS REQUIRED)

3. THE LOCATIONS OF THE EXISTING UTILITIES. AS SHOWN ON THE DRAWINGS, REPRESENT DATA RECEIVED FROM VARIOUS SOURCES, IT IS NOT GUARANTEED TO BE CORRECT OR ALL INCLUSIVE. THE CONTRACTOR SHALL CONDUCT HIS OWN INVESTIGATIONS INTO THE LOCATION, SIZE, DEPTH, AND NATURE OF ANY AND ALL EXISTING UTILITIES WHICH MAY INTERFERE WITH THE WORK UNDER THIS CONTRACT. ANY EXISTING UTILITIES WHICH ARE TO REMAIN IN SERVICE SHALL BE FULLY PROTECTED BY THE CONTRACTOR AND ANY DAMAGE CAUSED BY THE CONSTRUCTION SHALL BE IMMEDIATELY REPAIRED AT NO ADDITIONAL COST IN ACCORDANCE WITH ARTICLE 105.07.

4. THE CONTRACTOR SHALL COORDINATE CONSTRUCTION ACTIVITIES WITH UTILITY COMPANIES.

5. ALL WORK SHALL BE COMPLETED WITHIN THE LIMITS OF THE PROJECT SHOWN. NO EQUIPMENT, MATERIAL YARD OR FIELD OFFICE SHALL BE SET UP OR STORED ON TOWNSHIP OR PRIVATE PROPERTY WITHOUT WRITTEN PERMISSION OF THE ENGINEER.

6. MAINTENANCE OF TRAFFIC - GENERAL: TRAFFIC CONDITIONS, ACCIDENTS AND OTHER UNFORESEEN EMERGENCY CONDITIONS MAY REQUIRE THE ENGINEER TO RESTRICT, MODIFY OR REMOVE LANE CLOSURES OR CHANNELIZATION SHOWN IN THE PLANS. THE CONTRACTOR SHALL RESPOND WITHIN 30 MINUTES OF THE TIME OF NOTIFICATION BY THE ENGINEER FOR THE MAINTENANCE OF TRAFFIC CONTROL DEVICES.

7. TRAFFIC CONTROL DEFICIENCY DEDUCTION: TRAFFIC CONTROL DEFICIENCY WILL APPLY FOR THIS PROJECT. THE DEDUCTION WILL BE AS REQUIRED IN ARTICLE 105.03 OF THE STANDARD SPECIFICATION EXCEPT THE AMOUNT OF DEDUCTION WILL BE AS MODIFIED BY BDE SPECIAL PROVISIONS.

8. TRAFFIC CONTROL DEVICES: ALL TRAFFIC CONTROL DEVICES USED FOR THE MAINTENANCE OF TRAFFIC AS DETAILED ON THE PLANS SHALL BE REFLECTORIZED PRIOR TO INSTALLATION AND CLEANED AS NECESSARY THROUGHOUT THE DURATION OF THE CONTRACT.

9. BARRICADES: THE CONTRACTOR SHALL PROVIDE AND INSTALL TWO (2) WEIGHTED SANDBAGS ON EACH TYPE I OR TYPE II BARRICADE USED- ONE (1) WEIGHTED SAND BAG ACROSS EACH BOTTOM RAIL.

DRAINAGE NOTES

1. DURING CONSTRUCTION OPERATIONS ALL LOOSE MATERIAL DEPOSITED IN THE FLOW LINE OF DRAINAGE STRUCTURES AND TEMPORARY DITCHES THAT OBSTRUCTS THE NATURAL FLOW OF WATER SHALL BE REMOVED AT THE CLOSE OF EACH WORKING DAY. AT THE CONCLUSION OF THE CONSTRUCTION OPERATIONS, ALL DRAINAGE STRUCTURES SHALL BE CLEANED AS NECESSARY TO INSURE THAT THEY ARE FREE FROM ALL DIRT AND DEBRIS PRIOR TO THE FINAL INSPECTION OF THE PROJECT. THIS WORK WILL NOT BE MEASURED SEPARATELY FOR PAYMENT, BUT SHALL BE CONSIDERED INCLUDED IN THE COST OF EARTH EXCAVATION.

2. ANY FARM DRAIN, FIELD TILE SYSTEM OR OTHER UNDERGROUND TILE FACILITY ENCOUNTERED IN THE WORK SHALL BE LOCATED AND STAKED AND REPORTED TO THE ENGINEER. ANY DRAINAGE LINES WHICH ARE CUT OR DAMAGED BY GRADING, TRENCHING, EXCAVATION OR OTHER CONSTRUCTION ACTIVITIES SHALL BE REPAIRED SO AS TO MAINTAIN ITS ORIGINAL ALIGNMENT. IF THIS CANNOT BE ACCOMPLISHED, THE TILE SHALL BE REPAIRED AND CONNECTED TO THE PROPOSED STORM SEWER SYSTEM IN SUCH A MANNER AS TO RENDER THE LINES USABLE FOR THE PURPOSES INTENDED.

   THE WORK SHALL BE DONE IN ACCORDANCE WITH SECTION 611. THE MINIMUM SIZE FOR REPLACEMENT MUST BE 12 INCH FOR DRAIN PIPE, 12". A TYPE A INLET W/ TYPE 1 CLOSED LID WILL BE CONSTRUCTED TO CONNECT THE TILE(S) AND/OR STORM SEWER. A NOMINAL QUANTITY OF EACH ITEM HAS BEEN ADDED TO THE PLANS.

3. THE COST OF RESHAPING PROPOSED AND EXISTING DITCHES (IF REQUIRED) SHALL NOT BE PAID FOR SEPARATELY BUT SHALL BE INCLUDED IN THE COST OF EARTH EXCAVATION.

KANE-DUPAGE SOIL & WATER CONSERVATION DISTRICT

1. THE CONTRACTOR AND ENGINEER SHALL MEET WITH THE KANE-DUPAGE SOIL & WATER CONSERVATION DISTRICT TO COORDINATE ALL IN-STREAM WORK ACTIVITIES.

2. THE CONTRACTOR'S IN-STREAM WORK PLAN SHALL BE SUBMITTED TO THE SOIL & WATER CONSERVATION DISTRICT AND KANE COUNTY FOR REVIEW AND APPROVAL PRIOR TO STARTING ANY WORK. THERE WILL NO ADDITIONAL COMPENSATION FOR PROVIDING THE COORDINATION AND WORK PLAN.

3. SEE EROSION CONTROL PLAN SHEETS FOR ADDITIONAL DETAILS, CONDITIONS AND NOTES.

TREES AND SHRUBS

1. THE CONTRACTOR SHALL REMOVE ONLY THOSE TREES AND SHRUBS AS SHOWN ON THE PLANS OR AS DIRECTED BY THE ENGINEER, OR THOSE, WHICH DIRECTLY INTERFERE WITH THE SAFETY OR QUALITY OF CONSTRUCTION PRACTICES. THE CONTRACTOR SHALL EXERCISE EXTREME CARE WHEN WORKING NEAR EXISTING TREES AND SHRUBS TO AVOID DAMAGING THOSE NOT SCHEDULED FOR REMOVAL AND SHALL REPLACE IN-KIND ANY DAMAGED PLANTS AT HIS OWN EXPENSE.

☐ BOX AROUND NOTE INDICATES THAT ALL ITEMS AND RELATED WORK ARE INLCUDED IN THE COST OF OTHER ITEMS.

EARTHWORK AND ROADWAY

1. EARTHWORK SHALL BE PAID FOR ONLY ONCE, REGARDLESS OF STAGING. STOCK PILING OF MATERIALS FOR LATER USE AND REDISTRIBUTION SHALL BE DONE AT THE CONTRACTOR'S EXPENSE. STOCK PILING NECESSARY FOR RESPREADING IN SHOULDERS, CONSTRUCTING EMBANKMENTS, CUT OR BORROW AREAS SHALL BE CONSIDERED INCLUDED IN THE UNIT PRICE OF EARTH EXCAVATION.

2. ALL AGGREGATE AND BITUMINOUS BASE COURSES SHALL BE PRIMED. THIS WORK SHALL CONFORM TO THE APPROPRIATE ARTICLES OF SECTION 406 OF THE STANDARD SPECIFICATIONS. THE PRIME COAT FOR AGGREGATE SURFACES SHALL BE MC-30 APPLIED AT A RATE OF 0.30 GALLONS PER SQUARE YARD AND SS-1 APPLIED AT THE RATE OF 0.02-0.05 GALLONS PER SQUARE YARD FOR HMA BASES. THIS ITEM WILL BE PAID FOR SEPARATELY AS BITUMINOUS MATERIALS (PRIME COAT).

3. GEOTECHNICAL FABRIC FOR GROUND STABILIZATION:
   ITEM NO. 21001000 GEOTECHNICAL FABRIC FOR GROUND STABILIZATION WILL ONLY BE UTILIZED IN AREAS THAT HAVE BEEN IDENTIFIED AS SUBGRADE UNDERCUTS AREAS OR WHERE DETERMINED IN THE FIELD BY A GEOTECHNICAL ENGINEER. THE FABRIC WILL BE USED IN COMBINATION WITH AGGREGATE SUBGRADE IMPROVEMENT. THE QUANTITY INCLUDED IN THE PLANS IS BASED ON THE SUBSURFACE INVESTIGATION PREPARED BY TESTING SERVICE CORPORATION RECOMMENDATIONS FOR UNDERCUT AREAS.

4. ALL EXCAVATION AND EMBANKMENT LOCATIONS REQUIRING SEEDING OR SODDING SHALL BE CONSTRUCTED TO 6 INCHES BELOW FINISHED GRADE LINE TO ALLOW TOPSOIL PLACEMENT.

5. PAVEMENT ELEVATIONS: THE ELEVATIONS SHOWN ON THE PLANS ARE FINISHED GRADES FOR THE PROPOSED PAVEMENT OR SURFACE COURSE, UNLESS OTHERWISE INDICATED.

REMOVAL NOTES

1. MAILBOXES:
   THE WORK REQUIRED FOR THE REMOVAL AND REPLACEMENT OF PERMANENT MAILBOXES IS SPECIFIED IN THE STANDARD SPECIFICATIONS ARTICLE 107.20. MAILBOX REMOVAL AND REPLACEMENT WILL NOT BE PAID FOR SEPARATELY BUT SHALL BE INCLUDED IN THE PAY ITEM FOR MOBILIZATION.

   MAILBOXES ARE ANTICIPATED TO BE TEMPORARILY MOVED BECAUSE OF CONSTRUCTION OPERATIONS. MAILBOXES MAY HAVE TO BE MOVED MORE THAN ONCE. THE CONTRACTOR SHALL TEMPORARILY PLACE AND SUPPORT THE MAILBOX SO THAT IT IS SUITABLE FOR MAIL DELIVERY. MAINTAINING THE MAILBOX DURING CONSTRUCTION WILL BE NOT BE MEASURED SEPARATELY FOR PAYMENT. IF THE EXISTING MAILBOX AND/OR SUPPORT ARE DAMAGED BY THE CONSTRUCTION OPERATIONS, THEY WILL BE REPLACED BY THE CONTRACTOR AT NO COST TO THE PROJECT.

2. SAW CUTS:
   ALL LOCATIONS WHERE A SAW CUT IS REQUIRED FOR THE REMOVAL OF PAVEMENT, CURB, GUTTER, MEDIANS, DRIVEWAYS, SIDEWALK, BUTT JOINTS, PATCHES OR ANY OTHER STRUCTURE WHICH ARE ALL ONE PIECE WITH NO CONSTRUCTION JOINTS. THIS SAW CUT SHALL BE MADE AT THE LIMITS OF CONSTRUCTION OR OTHER AREAS AS REQUIRED TO PERFORM THE PROPOSED IMPROVEMENTS SHOWN ON THE PLANS. THE SAW CUT SHALL BE ACCOMPLISHED WITH A "PAVEMENT SAW". VERMEER TYPE TRENCHERS WILL NOT BE ALLOWED FOR FINAL SAW CUT AT THE LIMITS OF CONSTRUCTION. SAW CUTTING SHALL NOT BE PAID FOR SEPARATELY, BUT SHALL BE CONSIDERED INCLUDED IN THE UNIT CONTRACT PRICE OF THE RELATED REMOVAL ITEM.

3. DEBRIS REMOVAL:
   IT SHALL BE RESPONSIBILITY OF THE CONTRACTOR TO REMOVE AND DISPOSE OF ALL MATERIAL AND DEBRIS RESULTING FOR CONSTRUCTION ACTIVITIES OR AS NOTED ON THE PLANS. THE CONSTRUCTION DEBRIS SHALL BE DISPOSED OF OFF SITE AT AN APPROVED FACILITY OR AS DIRECTED BY THE ENGINEER. THE COST OF REMOVAL AND DISPOSAL OF ALL CONSTRUCTION RELATED DEBRIS SHALL BE INCLUDED IN THE COST OF THE RELATED WORK ITEM(S).

ROADWAY SIGNAGE

KANE COUNTY DIVISION OF TRANSPORTATION (KDOT) SHALL REMOVE ALL EXISITNG SIGNS AND SUPPLY AND ERECT ALL PROPOSED PERMANENT REGULATORY, WARNING AND RECREATION SIGNS ALONG WALKER ROAD FOR THIS PROJECT. THE CONTRACTOR SHALL COORDINATE ALL SIGN REMOVAL AND INSTALLATION WORK WITH THE ENGINEER. THE SIGNS HAVE BEEN INCLUDED IN THE PLANS FOR GENERAL REFERENCE.

ROADWAY SIGNAGE DESCRIBED ABOVE DOES NOT APPLY TO ANY SIGNAGE USED FOR CONSTRUCTION OPERATION. THE CONTRACTOR WILL BE RESPONSIBLE FOR SUPPLYING AND MAINTAINING ALL SIGNS REQUIRED FOR THE MAINTENANCE OF TRAFFIC OF THE VARIOUS STAGES OF CONSTRUCTION AND DETOURS.

OWNER OF RECORD

THE ILLINOIS DEPARTMENT OF TRANSPORTATION IS NOT THE OWNER OF RECORD FOR THIS BRIDGE. THOSE SEEKING HISTORIC, AS-BUILT OR OTHER EXISTING DOCUMENTS AND PLANS MUST CONTACT THE OWNER OF RECORD TO MAKE ARRANGEMENTS FOR ACCESS TO THIS INFORMATION.

SURVEY DATUM

THE HORIZONTAL DATUM IS NAD 83 AND THE VERTICAL DATUM IS NAVD 88.

DEMOLITION PLAN

BURLINGTON CREEK IS CONSIDERED WATERS OF THE U.S. OR "PUBLIC WATERS". THE CONTRACTOR WILL BE REQUIRED TO SUBMIT A DEMOLITION PLAN IN ACCORDANCE WITH ARTICLE 501.02 TO THE ENGINEER FOR APPROVAL. PREPARATION OF THE DEMOLITION PLAN WILL NOT BE MEASURED SEPARATELY FOR PAYMENT BUT SHALL BE INCLUDED IN THE COST OF THE REMOVAL OF THE EXISTING BRIDGE STRUCTURE.

INDEX OF SHEETS

HIGHWAY STANDARDS

STANDARD NO.	DESCRIPTION
000001-06	STANDARD SYMBOLS, ABBREVIATIONS AND PATTERNS
001001-02	AREAS OF REINFORCEMENT BARS
280001-06	TEMPORARY EROSION CONTROL SYSTEMS
420401-08	BRIDGE APPROACH PAVEMENT CONNECTOR
482001-02	HMA SHOULDER ADJACENT TO FLEXIBLE PAVEMENT
515001-03	NAME PLATE FOR BRIDGES
542101-02	REINFORCED CONCRETE END SECTIONS FOR PIPE CULVERTS 15" (375 MM) THRU 36" (900 MM) DIA. AT RIGHT ANGLES WITH ROADWAY
542301-03	PRECAST REINFORCED CONCRETE FLARED END SECTION
601001-04	SUB-SURFACE DRAINS
601101-01	CONCRETE HEADWALL FOR PIPE DRAIN
630001-10	STEEL PLATE BEAM GUARDRAIL
630101-09	GUARDRAIL MOUNTED ON EXISTING CULVERTS
630106	LONG-SPAN GUARDRAIL OVER CULVERT
630201-06	PCC/HMA STABILIZATION AT STEEL PLATE BEAM GUARDRAIL
630301-05	SHOULDER WIDENING FOR TYPE 1 (SPECIAL) GUARDRAIL TERMINALS
631032-07	TRAFFIC BARRIER TERMINAL, TYPE 6A
635006-03	REFLECTOR AND TERMINAL MARKER PLACEMENT
635011-02	REFLECTOR MARKER AND MOUNTING DETAILS
701001-02	OFF-RD OPERATION 2L, 2W, MORE THAN 15' AWAY
701006-03	OFF-RD OPERATION 2L, 2W, 4.5 M 15' TO 24" FROM PAVEMENT EDGE
701011-02	OFF-RD MOVING OPERATIONS, 2L, 2W, DAY ONLY
701301-04	LANE CLOSURE, 2L, 2W, SHORT TIME OPERATIONS
701311-03	LANE CLOSURE, 2L, 2W, MOVING OPERATIONS - DAY ONLY
701901-02	TRAFFIC CONTROL DEVICES
720001-01	SIGN PANEL MOUNTING DETAILS
720006-03	SIGN PANEL ERECTION DETAILS
728001-01	TELESCOPING STEEL SIGN SUPPORT
729001-01	APPLICATIONS OF TYPES A & B METAL POSTS (FOR SIGNS & MARKERS)
BLR 26-3	STEEL PLATE BEAM GUARDRAIL 29" HEIGHT

DISTRICT STANDARDS

STANDARD NO.	DESCRIPTION
BD-32	BUTT JOINTS AND HMA TAPER
BD-51	BENCHING DETAIL FOR EMBANKMENT WIDENING
TC-10	TRAFFIC CONTROL AND PROTECTION FOR SIDE ROADS, INTERSECTIONS, AND DRIVEWAYS
TC-13	DISTRICT ONE TYPICAL PAVEMENT MARKINGS
TC-22	ARTERIAL ROAD INFORMATION SIGN (DISTRICT 1)

SUMMARY OF QUANTITIES

SPECIAL PROVISION	SPECIALTY ITEM	CODE NO.	ITEM	UNIT	TOTAL QUANTITY	CONSTRUCTION CODE 80% FEDERAL 20% STATE ROADWAY 0004 NON-URBAN	BRIDGE 0011 NON-URBAN	TRAINEES 0042 NON-URBAN
•	S	20200100	EARTH EXCAVATION	CU YD	2,660	2,660		
		20201200	REMOVAL AND DISPOSAL OF UNSUITABLE MATERIAL	CU YD	2,565	2,565		
		20300100	CHANNEL EXCAVATION	CU YD	280		280	
		20400800	FURNISHED EXCAVATION	CU YD	1,765	1,765		
		20800150	TRENCH BACKFILL	CU YD	10.9	10.9		
		21001000	GEOTECHNICAL FABRIC FOR GROUND STABILIZATION	SQ YD	7,695	7,695		
		21101505	TOPSOIL EXCAVATION AND PLACEMENT	CU YD	1,355	1,355		
•		25000210	SEEDING, CLASS 2A	ACRE	1	1		
•		25000312	SEEDING, CLASS 4A	ACRE	0.7	0.7		
•		25000314	SEEDING, CLASS 4B	ACRE	0.3	0.3		
•		25000400	NITROGEN FERTILIZER NUTRIENT	POUND	155	155		
•		25000500	PHOSPHORUS FERTILIZER NUTRIENT	POUND	155	155		
•		25000600	POTASSIUM FERTILIZER NUTRIENT	POUND	155	155		
		25100630	EROSION CONTROL BLANKET	SQ YD	8,386	8,386		
		28000250	TEMPORARY EROSION CONTROL SEEDING	POUND	1,028	1,028		
		28000305	TEMPORARY DITCH CHECKS	FOOT	347	347		
		28000315	AGGREGATE DITCH CHECKS	TON	7	7		
		28000400	PERIMETER EROSION BARRIER	FOOT	2,444	2,444		
		28000500	INLET AND PIPE PROTECTION	EACH	7	7		
		28100105	STONE RIPRAP, CLASS A3	SQ YD	23	23		
		28100107	STONE RIPRAP, CLASS A4	SQ YD	748	279	469	
		28200200	FILTER FABRIC	SQ YD	783	314	469	
	S	30300001	AGGREGATE SUBGRADE IMPROVEMENT	CU YD	2,565	2,565		
	S	30300112	AGGREGATE SUBGRADE IMPROVEMENT 12"	SQ YD	4,200	4,200		
		31101100	SUBBASE GRANULAR MATERIAL, TYPE B	CU YD	77	77		
		31101200	SUBBASE GRANULAR MATERIAL, TYPE B 4"	SQ YD	328	328		
	S	35501316	HOT-MIX ASPHALT BASE COURSE, 8"	SQ YD	304	304		
	S	40603080	HOT-MIX ASPHALT BINDER COURSE, IL-19.0, N50	TON				
	S	40603335	HOT-MIX ASPHALT SURFACE COURSE, MIX "D", N50	TON				
•	S	40701891	HOT-MIX ASPHALT PAVEMENT (FULL-DEPTH), 10 1/2"	SQ YD	4,170	4,170		
	S	42001430	BRIDGE APPROACH PAVEMENT CONNECTOR (FLEXIBLE)	SQ YD	98	98		
		44000100	PAVEMENT REMOVAL	SQ YD	3,135	3,135		

SUMMARY OF QUANTITIES

SPECIAL PROVISION	SPECIALTY ITEM	CODE NO.	ITEM	UNIT	TOTAL QUANTITY	CONSTRUCTION CODE 80% FEDERAL 20% STATE		
						ROADWAY 0004 NON-URBAN	BRIDGE 0011 NON-URBAN	TRAINEES 0042 NON-URBAN
	S	48203029	HOT MIX ASPHALT SHOULDERS, 8"	SQ YD	1,383	1,383		
		50100100	REMOVAL OF EXISTING STRUCTURES	EACH	1		1	
		50104400	CONCRETE HEADWALL REMOVAL	EACH				
		50105220	PIPE CULVERT REMOVAL	FOOT	44	44		
		50200100	STRUCTURE EXCAVATION	CU YD	74		74	
		50300225	CONCRETE STRUCTURES	CU YD	59.4		59.4	
		50300255	CONCRETE SUPERSTRUCTURE	CU YD	186.9		186.9	
		50300260	BRIDGE DECK GROOVING	SQ YD	474		474	
		50300300	PROTECTIVE COAT	SQ YD	474		474	
		50500105	FURNISHING AND ERECTING STRUCTURAL STEEL	L SUM	1		1	
		50500505	STUD SHEAR CONNECTORS	EACH	1,062		1,062	
		50800205	REINFORCEMENT BARS, EPOXY COATED	POUND	54,940		54,940	
		50901050	STEEL RAILING, TYPE SM	FOOT	206		206	
		51200958	FURNISHING METAL SHELL PILES 14" X 0.250"	FOOT	525		525	
		51202305	DRIVING PILES	FOOT	525		525	
		51203200	TEST PILE METAL SHELLS	EACH	2		2	
		51500100	NAME PLATES	EACH	1		1	
		52100520	ANCHOR BOLTS, 1"	EACH	24		24	
		54213663	PRECAST REINFORCED CONCRETE FLARED END SECTIONS 18"	EACH	6	6		
		542A0223	PIPE CULVERTS, CLASS A, TYPE 1 18"	FOOT	88	88		
		59100100	GEOCOMPOSITE WALL DRAIN	SQ YD	61		61	
		60100060	CONCRETE HEADWALLS FOR PIPE DRAINS	EACH	2	2		
	S	60100945	PIPE DRAINS 12"	FOOT	40	40		
	S	60107600	PIPE UNDERDRAINS 4"	FOOT	749	749		
	S	60108100	PIPE UNDERDRAINS 4" (SPECIAL)	FOOT	26	26		
		60235300	INLETS, TYPE A, TYPE 1 FRAME, CLOSED LID	EACH	2	2		
•		63000001	STEEL PLATE BEAM GUARDRAIL, TYPE A, 6 FOOT POSTS	FOOT	532	532		
•		63100087	TRAFFIC BARRIER TERMINAL, TYPE 6A	EACH	4	4		
•		63100167	TRAFFIC BARRIER TERMINAL, TYPE 1 (SPECIAL) TANGENT	EACH	4	4		
		63200310	GUARDRAIL REMOVAL	FOOT	802	802		
		67100100	MOBILIZATION	L SUM	1	1		
•		70103815	TRAFFIC CONTROL SURVEILLANCE	CAL DA	5	5		

SUMMARY OF QUANTITIES

SPECIAL PROVISION	SPECIALTY ITEM	CODE NO.	ITEM	UNIT	TOTAL QUANTITY	CONSTRUCTION CODE 80% FEDERAL 20% STATE ROADWAY 0004 URBAN	BRIDGE 0011 NON-URBAN	TRAINEES 0042 URBAN
•	S	78009004	MODIFIED URETHANE PAVEMENT MARKING - LINE 4"	FOOT	4,325	4,325		
•	S	78200410	GUARDRAIL MARKERS, TYPE A	EACH	13	13		
•	S	78201000	TERMINAL MARKER - DIRECT APPLIED	EACH	4	4		
	S	X0326806	WASHOUT BASIN	L SUM	1	1		
	S	X2130010	EXPLORATION TRENCH, SPECIAL	FOOT	100	100		
	S	X4024000	TEMPORARY ACCESS (FIELD ENTRANCE)	EACH	3	3		
	S	X4060110	BITUMINOUS MATERIALS (PRIME COAT)	POUND	10,145	10,145		
	S	X4811800	AGGREGATE SHOULDERS (SPECIAL)	SQ YD	14	14		
	S	X5860110	GRANULAR BACKFILL FOR STRUCTURES	CU YD	95		95	
•	S	X6660445	RIGHT OF WAY AND PROPERTY CORNERS	EACH	15	15		
	S	X7010216	TRAFFIC CONTROL AND PROTECTION, (SPECIAL)	L SUM	1	1		
	S	X7010237	CHANGEABLE MESSAGE SIGN, SPECIAL	CAL DA	28	28		
•	S	XX006345	TURBIDITY BARRIER	FOOT	277	277		
		Z0004538	HOT-MIX ASPHALT DRIVEWAY PAVEMENT, 10"	SQ YD	304	304		
•	S	Z0013798	CONSTRUCTION LAYOUT	L SUM	1	1		
•	S	Z0030850	TEMPORARY INFORMATION SIGNING	SQ FT	80	80		
	S	Z0046304	PIPE UNDERDRAINS FOR STRUCTURES 4"	FOOT	124		124	
	S	Z0055905	TEMPORARY CONSTRUCTION FENCE	FOOT	200	200		
	S	Z0076600	TRAINEES	HOUR	500			500
	S	Z0076604	TRAINEES TRAINING PROGRAM GRADUATE	HOUR	500			500

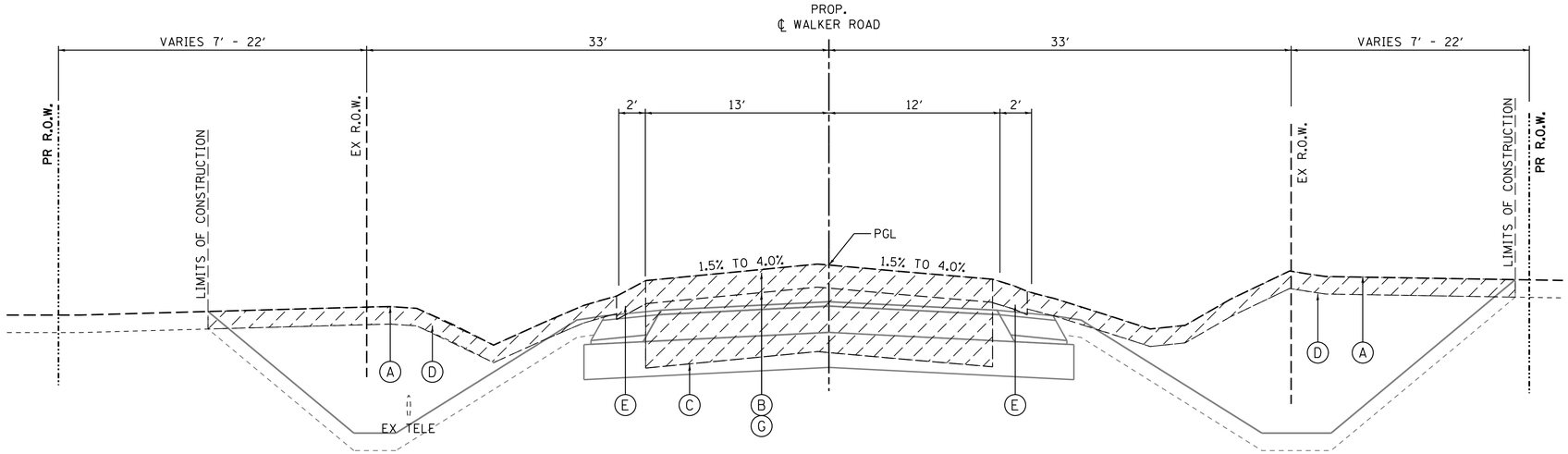

EXISTING TYPICAL SECTION NO. 1

STA. 3+20.0 TO 4+71.4 LT, WALKER ROAD
STA. 3+20.0 TO 4+65.4 RT, WALKER ROAD

STA. 10+24.6 TO 15+00.0 LT, WALKER ROAD
STA. 9+81.1 TO 15+00.0 RT, WALKER ROAD

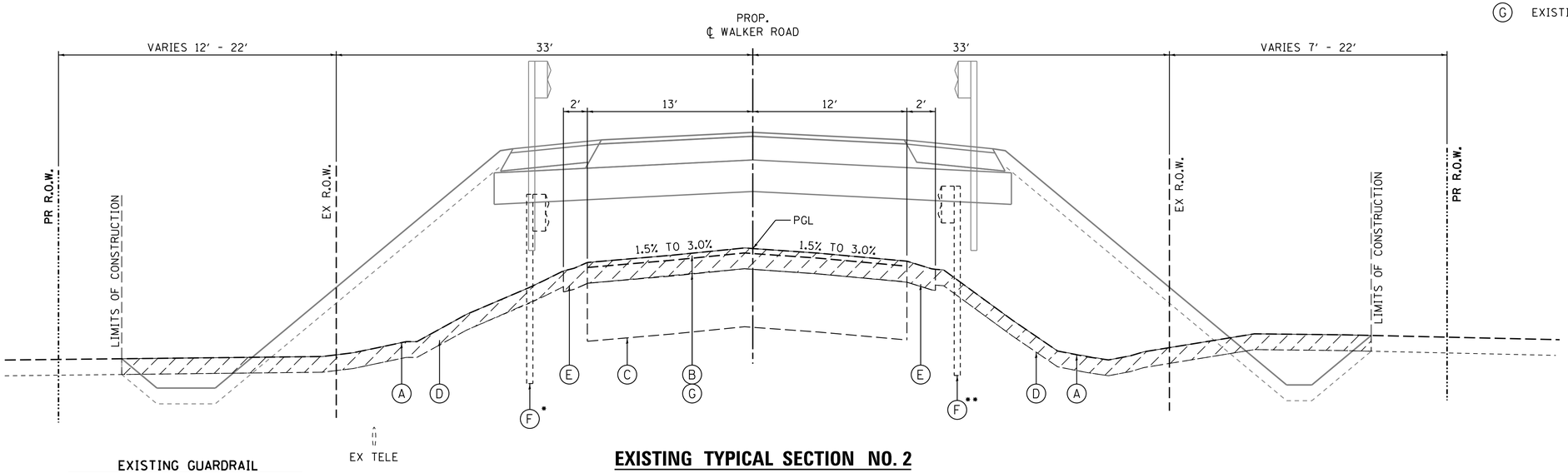

EXISTING GUARDRAIL

- * STA. 6+65.4 TO STA. 11+19.9, LT
- ** STA. 5+20.5 TO STA. 9+74.8, RT

NOTE: GUARDRAIL STATIONING INCLUDES TERMINALS AND BRIDGE RAILS

EXISTING TYPICAL SECTION NO. 2

STA. 4+71.4 TO 7+96.9 LT, WALKER ROAD
STA. 4+65.4 TO 7+96.9 RT, WALKER ROAD

EXISTING BRIDGE OMISSION

STA. 8+43.2 TO 10+24.6 LT, WALKER ROAD
STA. 8+43.2 TO 9+81.1 RT, WALKER ROAD

EXISTING PAVEMENT NOTES

1. INFORMATION ON HMA COURSE AND AGGREGATE BASE COURSE THICKNESSES ARE TAKEN FROM THE FOLLOWING RESOURCES:

   ROADWAY GEOTECHNICAL INFORMATION HAS BEEN DOCUMENTED IN THE STRUCTURE GEOTECHNICAL REPORT PREPARED BY TESTING SERVICE CORPORATION DATED JULY 17, 2012.

2. IT SHALL BE THE RESPONSIBILITY OF THE CONTRACTOR TO VERIFY THE THICKNESS OF THE EXISTING PAVEMENTS TO BE REMOVED AND THE EXTENT TO WHICH THEY ARE REINFORCED. NO ADDITIONAL COMPENSATION WILL BE ALLOWED BECAUSE OF VARIATIONS FROM THE ASSUMED THICKNESS SHOWN ON THE PLANS OR FOR VARIATIONS IN THE AMOUNT OF REINFORCEMENT.

LEGEND, EXISTING

- (A) EXISTING GROUND LINE
- (B) EXISTING PAVEMENT STRUCTURE, 7.2"-8.6" (SEE NOTES 1 & 2)
  - HOT-MIX ASPHALT SURFACE COURSE, 2.0"
  - HOT-MIX ASPHALT BASE COURSE, 5.2"-6.6"
- (C) EXISTING SAND/GRAVEL FILL, 20"-22" (SEE NOTES 1 & 2)
- (D) EXISTING TOPSOIL, 6" - TO BE REMOVED (21101505)
- (E) EXISTING AGGREGATE SHOULDER, 6" - TO BE REMOVED (INCLUDED IN EARTH EXCAVATION, 20200100)
- (F) EXISTING W-BEAM GUARDRAIL - TO BE REMOVED (63200310)
- (G) EXISTING PAVEMENT STRUCTURE TO BE REMOVED (44000100)

FILE NAME = W:\Projects\2013\130174 WalkerPhil\cadd\Civil\Dgn\Sht\TYPICAL_1.dgn

WILLS BURKE KELSEY ASSOCIATES LTD. 116 West Main Street, Suite 201 St. Charles, Illinois 60174	USER NAME = nparris	DESIGNED -	REVISED -	STATE OF ILLINOIS DEPARTMENT OF TRANSPORTATION	TYPICAL SECTIONS	C.H. RTE.	SECTION	COUNTY	TOTAL SHEETS / SHEET NO.
		DRAWN -	REVISED -			46	08-00133-01-BR	KANE	87 / 6
	PLOT SCALE = 1:5	CHECKED -	REVISED -					CONTRACT NO.XXXXXX	
	PLOT DATE = 9/8/2014	DATE -	REVISED -		SCALE: SHEET NO. 1 OF 4 SHEETS STA. TO STA.		ILLINOIS FED. AID PROJECT		

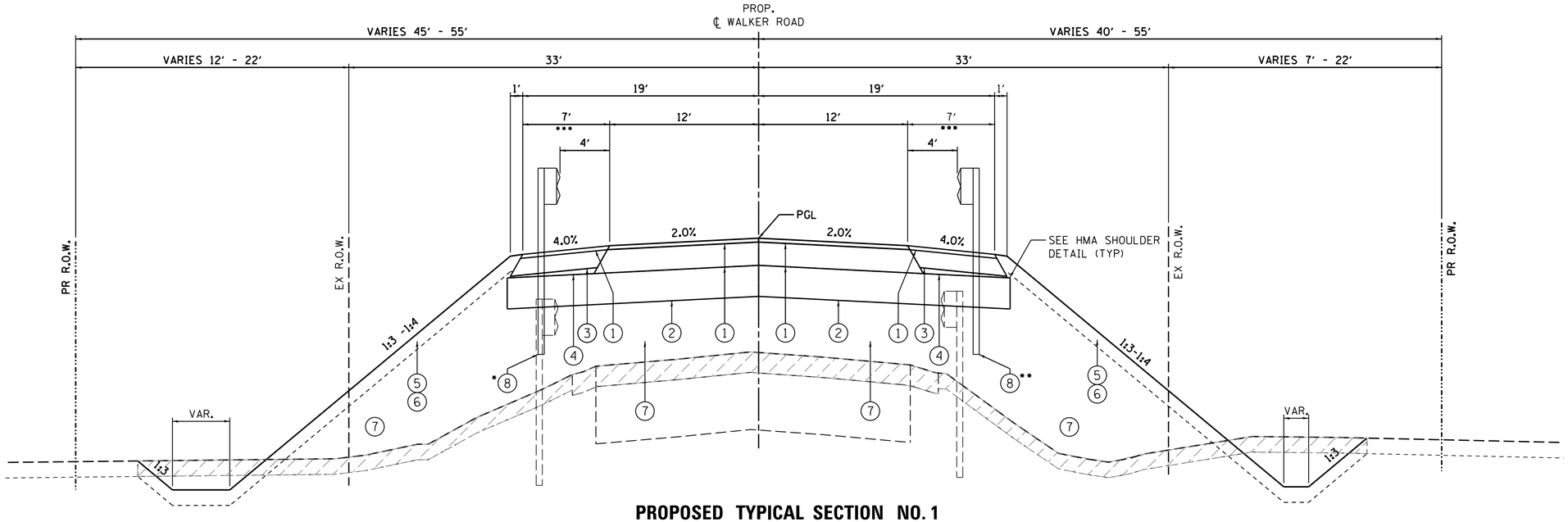

PROPOSED TYPICAL SECTION NO. 1

STA. 4+71.40 TO 7+53.57 LT, WALKER ROAD
STA. 4+65.40 TO 7+53.57 RT, WALKER ROAD

PROP. BRIDGE OMISSION STA. 7+53.57 TO STA. 8+86.43

STA. 8+86.43 TO STA. 10+96.40 LT, WALKER ROAD
STA. 8+86.43 TO STA. 9+81.10 RT, WALKER ROAD

• STA. 4+71.40 TO STA. 7+77.80, LT
STA. 8+80.70 TO STA. 10+96.40, LT

•• STA. 4+65.40 TO STA. 7+59.30, RT
STA. 8+62.20 TO STA. 9+81.10, RT

NOTE: GUARDRAIL STATIONING INCLUDES TERMINALS

••• SHOULDER WIDTHS

-- LEFT SIDE --
℄STA. 3+20.0 TO 4+37.4, 4'
STA. 4+37.4 TO 4+61.4, TAPER 4' TO 8'
STA. 4+61.4 TO 4+96.4, 8'
STA. 4+96.4 TO 5+02.4, TAPER 8' TO 7'
STA. 5+02.4 TO 7+77.8, 7'
-- BRIDGE OMISSION --
STA. 8+80.7 TO 10+65.4, 7'
STA. 10+65.4 TO 10+74.4, TAPER 7' TO 8'
STA. 10+74.4 TO 11+06.4, 8'
STA. 11+06.4 TO 11+30.4, TAPER 8' TO 4'
STA. 11+30.4 TO 15+00.0, 4'

-- RIGHT SIDE --
STA. 3+20.0 TO 4+31.4, 4'
STA. 4+31.4 TO 4+55.4, TAPER 4' TO 8'
STA. 4+55.4 TO 4+90.4, 8'
STA. 4+90.4 TO 4+96.4, TAPER 8' TO 7'
STA. 4+96.4 TO 7+59.3, 7'
-- BRIDGE OMISSION --
STA. 8+62.2 TO 9+50.1, 7'
STA. 9+50.1 TO 9+56.1, TAPER 7' TO 8'
STA. 9+56.1 TO 9+90.0, 8'
STA. 9+90.0 TO 10+24.0, TAPER 8' TO 4'
STA. 10+24.0 TO 15+00.0, 4'

LEGEND, PROPOSED

1. HMA PAVEMENT (FULL-DEPTH), 10-3/4" (40701896)
   2" SURFACE COURSE, MIX "D", N50
   8-3/4" HMA BASE COURSE, IL-19.0
2. AGGREGATE SUBGRADE IMPROVEMENT, 12" (30300112)
3. HMA SHOULDERS, 8" (48203029)
   2" SURFACE COURSE, MIX "D", N50
   6" HMA BASE COURSE, IL-19.0
4. SUB-BASE GRANULAR MATERIAL, TYPE B (31101100)
5. 6" TOPSOIL EXCAVATION AND PLACEMENT
6. SEEDING (TYPE AS SPECIFIED) W/EROSION CONTROL BLANKET
7. STRUCTURAL EMBANKMENT
8. STEEL PLATE BEAM GUARDRAIL, TYPE A, 6' POSTS (63000001)
9. AGGREGATE SUBGRADE IMPROVEMENT (30300001) (SEE UNDERCUT TABLE)
10. GEOTECHNICAL FABRIC FOR GROUND STABILIZATION (21001000)
11. SUBGRADE UNDERCUT (20201200)
12. AGGREGATE SHOULDER, SPECIAL CA1 (X481800)
13. FILTER FABRIC (28200200)
14. PIPE UNDERDRAIN, 4" - PERFORATED CORRUGATED POLYETHYLENE TUBING (6018100)

HOT-MIX ASPHALT MIXTURE REQUIREMENTS

ITEM	AIR VOIDS @ Ndes
WALKER ROAD - FULL DEPTH RECONSTRUCTION (10-1/2")	
HOT-MIX ASPHALT SURFACE COURSE, MIX "D", N50 (IL 9.5 mm); 2"	4% @ 50 GYR.
HOT-MIX ASPHALT BINDER COURSE, IL-19.0, N50; 8½" (2-1/4" MIN. - 4" MAX.)•	4% @ 50 GYR.
WALKER ROAD - APPROACH PAVEMENT CONNECTOR (FLEXIBLE)	
HOT-MIX ASPHALT SURFACE COURSE, MIX "D", N50 (IL 9.5 mm); 2"	4% @ 50 GYR.
HOT-MIX ASPHALT BINDER COURSE, IL-19.0, N50 (2-1/4" MIN. - 4" MAX.)•	4% @ 50 GYR.
HMA SHOULDERS (8")	
HOT-MIX ASPHALT SURFACE COURSE, MIX "D", N50 (IL 9.5 mm); 2"	4% @ 50 GYR.
HOT-MIX ASPHALT SHOULDER (HMA BINDER IL-19 mm), 6" (2-1/4" MIN. - 4" MAX.)•	4% @ 50 GYR.
DRIVEWAYS (10")	
HOT-MIX ASPHALT SURFACE COURSE, MIX "D", N50 (IL 9.5 mm); 2"	4% @ 50 GYR.
HOT-MIX ASPHALT BASE COURSE (HMA BINDER IL-19 mm), FE-8" (2-1/4" MIN. - 4" MAX.)•	4% @ 50 GYR.

THE UNIT WEIGHT USED TO CALCULATE ALL HMA SURFACE MIXTURE QUANTITIES IS 112 LB/SQYD/IN.

THE AC TYPE FOR NON-POLYMERIZED HMA THE "AC TYPE" SHALL BE "PG 64-22" UNLESS MODIFIED BY DISTRICT ONE SPECIAL PROVISIONS. FOR "PERCENT OF RAP" SEE DISTRICT ONE SPECIAL PROVISIONS.

•NUMBER OF LIFTS TO BE DETERMINED BY THE ENGINEER.

STRUCTURAL PAVEMENT DESIGN

STRUCTURAL DESIGN TRAFFIC: Year 2025
PV = 2715 SU = 256 MU = 224
ROAD/STREET CLASSIFICATION: Class 2
PERCENT OF STRUCTURAL DESIGN TRAFFIC IN DESIGN LANE:
P = 85 S = 8 M = 7
TRAFFIC FACTOR: Actual TF = 1.15 AC Type = PG 64-22
Minimum TF = NA
PG GRADE: Binder = PG 64-22 / 58-22 Surface = PG 58-28
SUBGRADE SUPPORT RATING: SSR = POOR

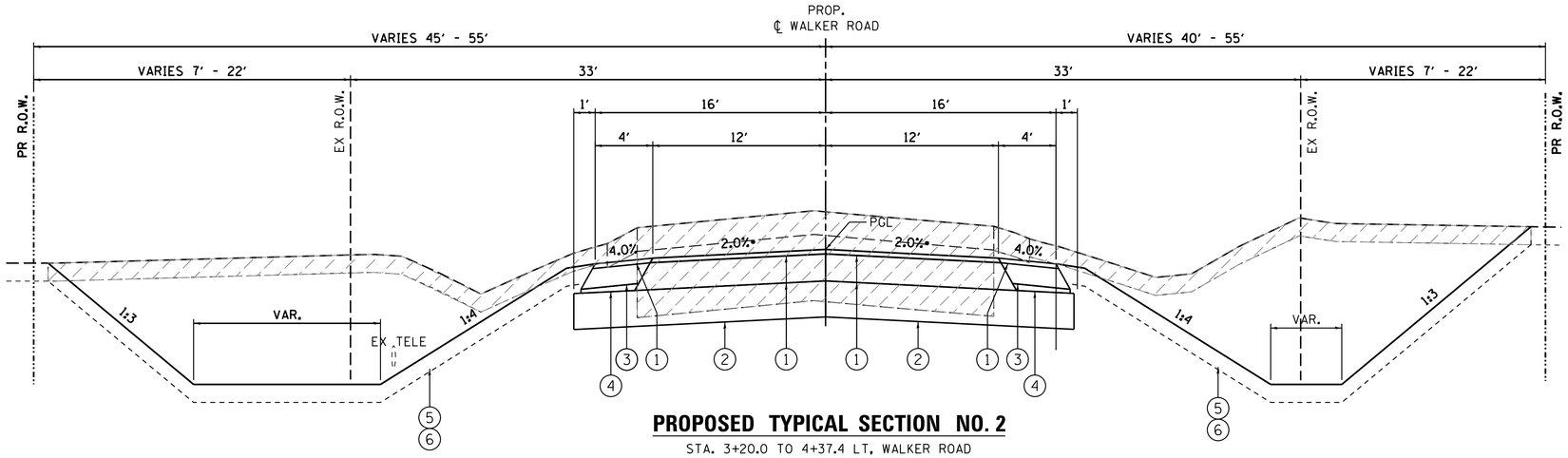

PROPOSED TYPICAL SECTION NO. 2

STA. 3+20.0 TO 4+37.4 LT, WALKER ROAD
STA. 3+20.0 TO 4+31.4 RT, WALKER ROAD
STA. 11+30.4 TO 15+00.0 LT, WALKER ROAD
STA. 10+24.0 TO 15+00.0, RT WALKER ROAD

•PAVEMENT CROSS SLOPE SHALL BE TRANSITIONED FROM PROP. 2% TO MATCH THE EXISTING CROSS SLOPE OVER A MINIMUM DISTANCE OF 50' AT EACH END OF THE PROJECT.

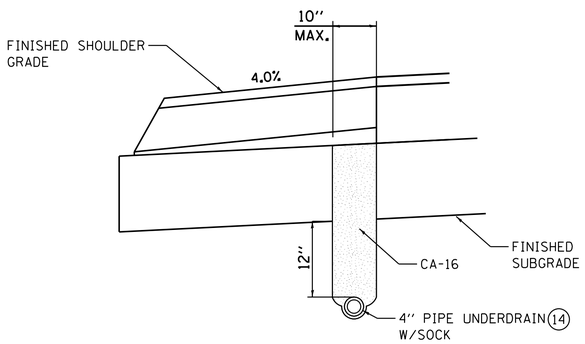

UNDERDRAIN DETAIL

STA. 11+00.00 TO STA. 14+50.00 (LT/RT), WALKER ROAD

UNDERDRAIN NOTES

1. PIPE UNDERDRAINS TO BE PLACED AS INDICATED ON THE PLANS.
2. CAPS, PLUGS, WYES, AND TEES ARE CONSIDERED INCLUDED IN THE COST OF THE UNDERDRAINS.
3. ALL END RUNS SHALL HAVE A CAP OR PLUG.
4. UNDERDRAINS SHALL BE CONNECTED AS SHOWN ON THE PLANS WHICH COST IS INCLUDED IN THE COST OF THE UNDERDRAINS.
5. UNDERDRAIN MATERIAL SHALL BE PERFORATED CORRUGATED POLYETHYLENE TUBING.
6. UNDERDRAIN OUTLET PIPE MATERIAL SHALL CORRUGATED POLYETHYLENE PIPE WITH A SMOOTH INTERIOR.
7. EXCAVATION, FABRIC SOCK, AND POROUS GRANULAR BACKFILL AS SPECIFIED SHALL BE INCLUDED IN THE COST OF THE UNDERDRAIN.

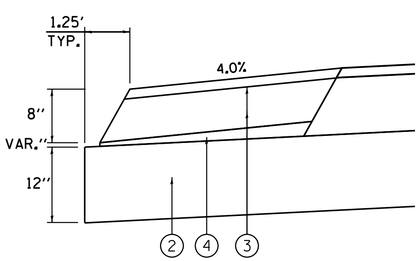

HMA SHOULDER DETAIL

STA. 3+20.00 TO STA. 15+00.00 (LT/RT, WALKER ROAD

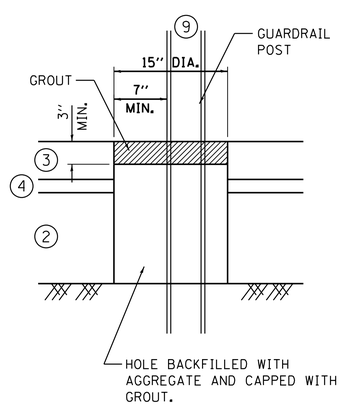

GUARDRAIL GROUT DETAIL

SEE STD. 630201 FOR ADDITIONAL DETAILS

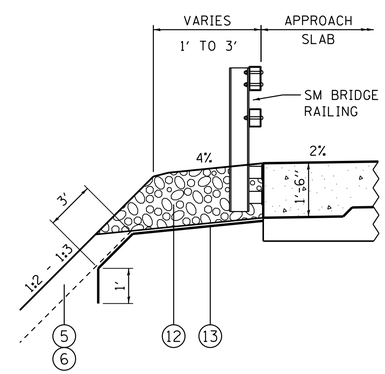

TYPICAL SECTION AGGREGATE SHOULDER, SPECIAL

STA. 7+77.8 TO 7+92.4 LT, WALKER ROAD
STA. 7+59.3 TO 7+73.2 RT, WALKER ROAD
-- BRIDGE OMISSION --
STA. 8+66.8 TO 8+80.7 LT, WALKER ROAD
STA. 8+47.6 TO 8+62.2 RT, WALKER ROAD

LEGEND, PROPOSED

1. HMA PAVEMENT (FULL-DEPTH), 10-3/4'' (40701896)
   2'' SURFACE COURSE, MIX ''D'', N50
   8-3/4'' HMA BASE COURSE, IL-19.0
2. AGGREGATE SUBGRADE IMPROVEMENT, 12'' (30300112)
3. HMA SHOULDERS, 8'' (48203029)
   2'' SURFACE COURSE, MIX ''D'', N50
   6'' HMA BASE COURSE, IL-19.0
4. SUB-BASE GRANULAR MATERIAL, TYPE B (31101100)
5. 6'' TOPSOIL EXCAVATION AND PLACEMENT
6. SEEDING (TYPE AS SPECIFIED) W/EROSION CONTROL BLANKET
7. STRUCTURAL EMBANKMENT
8. STEEL PLATE BEAM GUARDRAIL, TYPE A, 6' POSTS (63000001)
9. AGGREGATE SUBGRADE IMPROVEMENT (30300001) (SEE UNDERCUT TABLE)
10. GEOTECHNICAL FABRIC FOR GROUND STABILIZATION (21001000)
11. SUBGRADE UNDERCUT (20201200)
12. AGGREGATE SHOULDER, SPECIAL CA1 (X481800)
13. FILTER FABRIC (28200200)
14. PIPE UNDERDRAIN, 4'' - PERFORATED CORRUGATED POLYETHYLENE TUBING (6018100)

FILE NAME = W:\Projects\2013\130174 WalkerPhil\cadd\Civil\Dgn\Sht\TYPICAL_3.dgn

WILLS BURKE KELSEY ASSOCIATES LTD.
116 West Main Street, Suite 201
St. Charles, Illinois 60174

USER NAME = nparris	DESIGNED -	REVISED -
	DRAWN -	REVISED -
PLOT SCALE = 1:5	CHECKED -	REVISED -
PLOT DATE = 9/8/2014	DATE -	REVISED -

STATE OF ILLINOIS
DEPARTMENT OF TRANSPORTATION

TYPICAL SECTIONS

SCALE: | SHEET NO. 3 OF 4 SHEETS | STA. | TO STA.

C.H. RTE.	SECTION	COUNTY	TOTAL SHEETS	SHEET NO.
46	08-00133-01-BR	KANE	87	8

CONTRACT NO.XXXXXX

ILLINOIS FED. AID PROJECT

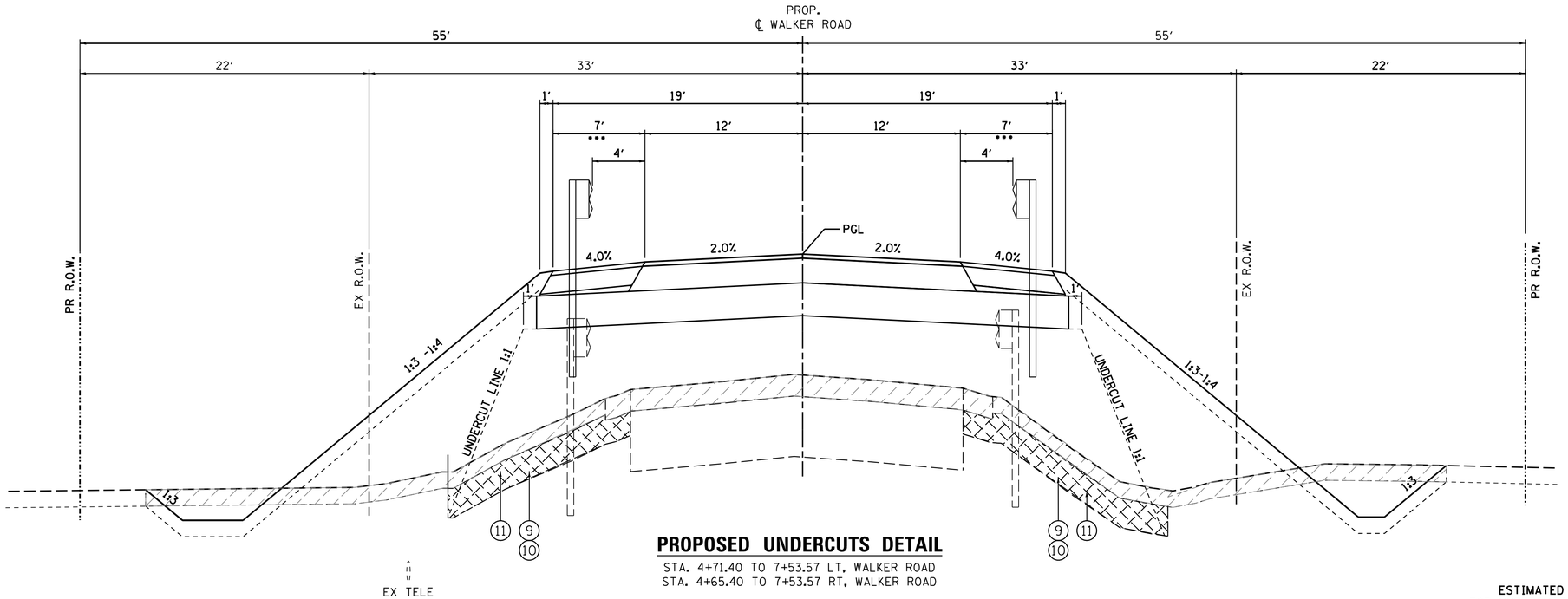

PROPOSED UNDERCUTS DETAIL

STA. 4+71.40 TO 7+53.57 LT, WALKER ROAD
STA. 4+65.40 TO 7+53.57 RT, WALKER ROAD

PROP. BRIDGE OMISSION STA. 7+53.57 TO STA. 8+86.43

STA. 8+86.43 TO STA. 10+96.40 LT, WALKER ROAD
STA. 8+86.43 TO STA. 9+81.10 RT, WALKER ROAD

ESTIMATED THICKNESS
FOR UNDERCUTTING, AGGREGATE
IMPROVEMENT SUBGRADE AND
GEOTECHNICAL FABRIC

BORING	LOCATION	THICKNESS
B2	3+20 TO 7+83.57	12 INCHES
B1	8+56.43 TO 15+00	8 INCHES

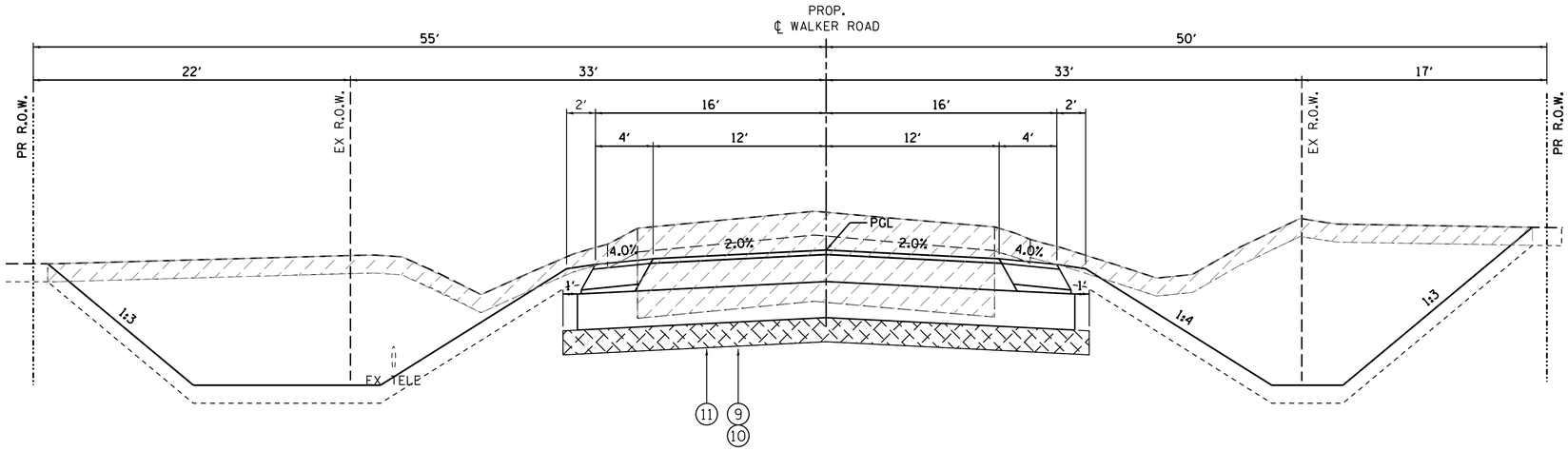

PROPOSED UNDERCUTS DETAIL

STA. 3+20.0 TO 4+37.4 LT, WALKER ROAD
STA. 3+20.0 TO 4+31.4 RT, WALKER ROAD
STA. 11+30.4 TO 15+00.0 LT, WALKER ROAD
STA. 10+24.0 TO 15+00.0, RT WALKER ROAD

LEGEND, PROPOSED

1. HMA PAVEMENT (FULL-DEPTH), 10-3/4" (40701896)
   2" SURFACE COURSE, MIX "D", N50
   8-3/4" HMA BASE COURSE, IL-19.0
2. AGGREGATE SUBGRADE IMPROVEMENT, 12" (30300112)
3. HMA SHOULDERS, 8" (48203029)
   2" SURFACE COURSE, MIX "D", N50
   6" HMA BASE COURSE, IL-19.0
4. SUB-BASE GRANULAR MATERIAL, TYPE B (31101100)
5. 6" TOPSOIL EXCAVATION AND PLACEMENT
6. SEEDING (TYPE AS SPECIFIED) W/EROSION CONTROL BLANKET
7. STRUCTURAL EMBANKMENT
8. STEEL PLATE BEAM GUARDRAIL, TYPE A, 6' POSTS (63000001)
9. AGGREGATE SUBGRADE IMPROVEMENT (30300001) (SEE UNDERCUT TABLE)
10. GEOTECHNICAL FABRIC FOR GROUND STABILIZATION (21001000)
11. SUBGRADE UNDERCUT (20201200)
12. AGGREGATE SHOULDER, SPECIAL CA1 (X481800)
13. FILTER FABRIC (28200200)
14. PIPE UNDERDRAIN, 4" - PERFORATED CORRUGATED POLYETHYLENE TUBING (6018100)

FILE NAME = W:\Projects\2013\138174 WalkerPhil\cadd\Civil\Dgn\Sht\TYPICAL_4.dgn

WILLS BURKE KELSEY ASSOCIATES LTD.
116 West Main Street, Suite 201
St. Charles, Illinois 60174

USER NAME = nparris	DESIGNED -	REVISED -
	DRAWN -	REVISED -
PLOT SCALE = 1:5	CHECKED -	REVISED -
PLOT DATE = 9/8/2014	DATE -	REVISED -

STATE OF ILLINOIS
DEPARTMENT OF TRANSPORTATION

TYPICAL SECTIONS

SCALE: | SHEET NO. 4 OF 4 SHEETS | STA. | TO STA.

C.H. RTE.	SECTION	COUNTY	TOTAL SHEETS	SHEET NO.
46	08-00133-01-BR	KANE	87	9

CONTRACT NO.XXXXXX

ILLINOIS FED. AID PROJECT

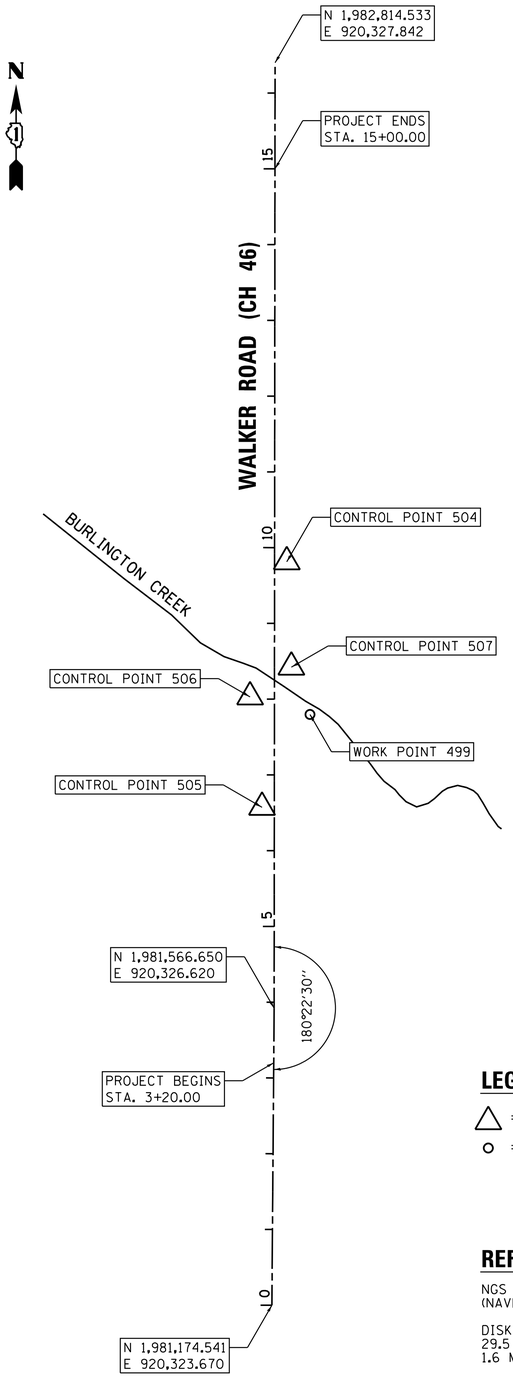

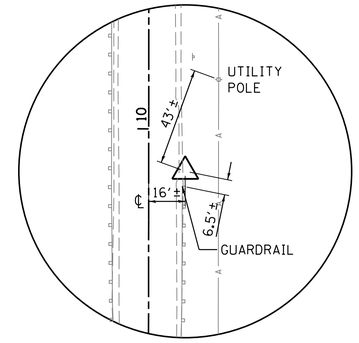

CONTROL
POINT NO. 504

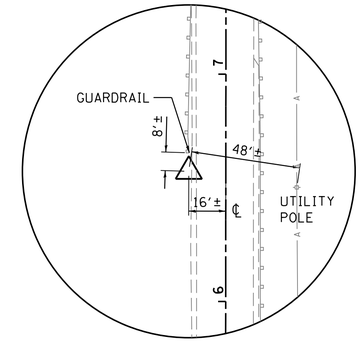

CONTROL
POINT NO. 505

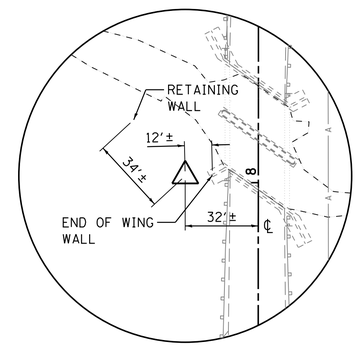

CONTROL
POINT NO. 506

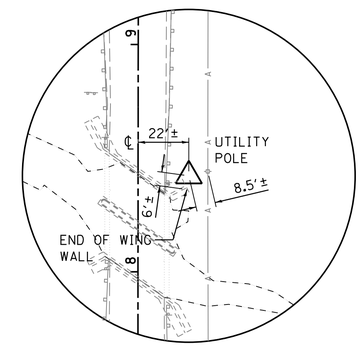

CONTROL
POINT NO. 507

LEGEND

△ = HORIZONTAL CONTROL POINT LOCATION

○ = SURVEY WORK POINT LOCATION

REFERENCE MARK

NGS MONUMENT, DESIGNATION L 131, PID NH0080
(NAVD 88 DATUM)

DISK SET IN TOP OF CONCRETE MONUMENT LOCATED 29.5 FT SOUTH OF CENTERLINE OF IL ROUTE 72 AND 1.6 MILES EAST OF STATE ST.

ELEVATION = 981.00

HORIZONTAL CONTROL POINTS (NAD 83)

POINT	NORTH	EAST	ELEVATION	CHAIN	STATION	OFFSET	DESCRIPTION
504	1,982,165.857	920,343.288	842.70	WALKER	9+81.34	16.091' RT	IRON PIPE W/ CAP
505	1,981,831.819	920,310.580	842.48	WALKER	6+57.27	16.300' LT	IRON PIPE W/ CAP
506	1,981,977.534	920,294.865	842.74	WALKER	8+02.97	32.157' LT	IRON PIPE W/ CAP
507	1,982,016.737	920,349.364	840.47	WALKER	8+42.23	22.303' RT	IRON PIPE W/ CAP

SURVEY WORK POINTS

POINT	NORTH	EAST	ELEVATION	CHAIN	STATION	OFFSET	DESCRIPTION
499	1,981,954.350	920,373.950	838.38	WALKER	7+79.87	46.950' RT	SET HUB & TACK

FILE NAME = W:\Projects\2013\130174 WalkerPhII\cadd\Civil\Dgn\Sht\ATB.01.dgn

WILLS BURKE KELSEY ASSOCIATES LTD.
116 West Main Street, Suite 201
St. Charles, Illinois 60174

USER NAME = nparris	DESIGNED -	REVISED -
	DRAWN -	REVISED -
PLOT SCALE = 1:100	CHECKED -	REVISED -
PLOT DATE = 9/8/2014	DATE -	REVISED -

STATE OF ILLINOIS
DEPARTMENT OF TRANSPORTATION

ALIGNMENT, TIES & BENCHMARKS

SCALE: | SHEET NO. 1 OF 1 SHEETS | STA. TO STA.

C.H. RTE.	SECTION	COUNTY	TOTAL SHEETS	SHEET NO.
46	08-00133-01-BR	KANE	87	16
		CONTRACT NO.XXXXXX		
	ILLINOIS	FED. AID PROJECT		

GENERAL NOTES:

1. THE CONTRACTOR SHALL CONSTRUCT AND MAINTAIN AGGREGATE SURFACE COURSE FOR TEMPORARY ACCESS TO FIELD ENTRANCES. THE TEMPORARY CLOSURE OF FIELD ENTRANCES WILL BE LIMITED TO THE DURATION OF THE CONSTRUCTION DIRECTLY IN FRONT OF THE ENTRANCE. IN THE EVENT THAT THE PLANTING SEASON IS COMPLETE AND ACCESS TO THE FIELD(S) ARE NOT REQUIRED, THIS ITEM MAY BE OMITTED WITH THE APPROVAL OF THE ENGINEER. OTHERWISE THE ENTRANCE(S) SHALL BE OPEN AT THE END OF THE WORK DAY OR AS APPROVED BY THE ENGINEER. THE CONTRACTOR SHALL COORDINATE CLOSURES WITH THE ENGINEER AND PROPERTY OWNER A MINIMUM OF SEVEN (7) DAYS IN ADVANCE OF THE CLOSURE.

2. AGGREGATE SURFACE FOR TEMPORARY ACCESS WILL BE MEASURED FOR PAYMENT FOR EACH FIELD ENTRANCE CONSTRUCTED FOR THE PURPOSE OF TEMPORARY ACCESS. TEMPORARY AGGREGATE SURFACE COURSE SHALL BE PAID FOR AT THE CONTRACT UNIT COST EACH FOR TEMPORARY ACCESS (FIELD ENTRANCE).

3. THE TRAFFIC CONTROL DEPICTED HEREIN IS THE MINIMUM REQUIREMENT. ADDITIONAL TRAFFIC CONTROL DEVICES, AS SPECIFIED BY THE SPECIAL PROVISIONS, SHALL BE PLACED BY THE CONTRACTOR TO THE SATISFACTION OF THE ENGINEER. ALL TRAFFIC CONTROL DEVICES, UNLESS OTHERWISE NOTED IN THE PLANS OR SPECIAL PROVISIONS, SHALL BE INCLUDED IN THE COST OF THE PAY ITEM TRAFFIC CONTROL AND PROTECTION, (SPECIAL).

TEMPORARY DETOUR DURATION

THE CONTRACT DOCUMENTS WILL ALLOW THE ROADWAY CLOSURE AND TEMPORARY DETOUR DETAILED ON THIS SHEET TO REMAIN IN PLACE UNTIL AUGUST 22, 2014. THE CONTRACTOR WILL BE EXPECTED TO COMPLETE ALL THE PROPOSED WORK RELATED TO THE CONSTRUCTION OF THE PROPOSED BRIDGE AND ROADWAY DURING THIS CLOSURE. THE ROADWAY MUST HAVE THE HMA SURFACE COURSE PLACED AND THE GUARDRAIL INSTALLED BEFORE THE ROADWAY IS OPENED TO TRAFFIC. IF THE SURFACE COURSE AND GUARDRAIL ARE NOT COMPLETED IN THE ALLOWED TIME, ADDITIONAL TRAFFIC CONTROL DEVICES REQUIRED FOR THE COMPLETION OF REMAINING CONSTRUCTION OPERATIONS WILL BE AT THE CONTRACTOR'S EXPENSE.

CHANGEABLE MESSAGE SIGN

THE CONTRACTOR SHALL PLACE ELECTRONIC CHANGEABLE MESSAGE SIGNS ON THE EAST AND WEST SIDES OF THE PROJECT TO WARN THE PUBLIC OF THE PENDING CLOSURE. THE MESSAGE BOARDS WILL NEED TO BE PLACED AND SET OUT FOR SEVEN (7) DAYS IN ADVANCE OF THE ANTICIPATED FIRST DAY OF CONSTRUCTION. THE SIGNS SHALL REMAIN IN PLACE FOR AN ADDITIONAL SEVEN (7) AFTER THE FIRST DAY OF CONSTRUCTION. THE CONTRACTOR WILL COORDINATE WITH THE ENGINEER ON THE EXACT PLACEMENT OF THE MESSAGE BOARDS AND THE MESSAGE THAT IS TO BE DISPLAYED. THE MESSAGE MAY PERIODICALLY BE CHANGED BY THE COUNTY AND/OR ENGINEER. THERE WILL BE NO ADDITIONAL COMPENSATION FOR CHANGING OF THE MESSAGE(S). THE MESSAGE BOARDS WILL BE PAID FOR AS CHANGEABLE MESSAGE SIGN, SPECIAL PER CALENDAR DAY FOR EACH MESSAGE SIGN UTILIZED.

TEMPORARY INFORMATION SIGN

THE CONTRACTOR SHALL ERECT ON THE EAST AND WEST SIDE OF THE PROJECTE TO INFORM THE PUBLIC OF THE CONSTRUCTION DURATION. THE CONTRACTOR WILL COORDINATE WITH THE ENGINEER ON THE EXACT PLACEMENT OF THE SIGN. THE SIGN SHALL BE IN PLACE FOR THE ENTIRE DURATION OF THE CONTRACT OR AS DIRECTED BY THE ENGINEER. THE TEMPORARY SIGN WILL BE AS DIMENSIONED ON STD. TC22 EXCEPT THE MESSAGE SHALL BE AS DETAILED ON THE DETOUR PLAN. THE SIGNING, WHICH INCLUDES POST AND MOUNTING, WILL BE PAID AS TEMPORARY INFORMATION SIGNING, PER EACH FOR EACH SIGN ERECTED.

CONTACTS

THE CONTRACTOR WILL BE REQUIRED TO COORDINATE ALL MAINTENANCE OF TRAFFIC OPERATIONS WITH ALL MUNICIPALITIES, TOWNSHIP, AND COUNTY ENTITIES WITHIN THE PROJECT LIMITS. THE FOLLOWING IS THE APPLICABLE LIST OF CONTACTS:

KANE COUNTY DIVISION OF TRANSPORTATION	DAVE BOESCH, CHIEF OF CNSTR.	630-584-1170
KANE COUNTY SHERIFF	PATRICK PEREZ, SHERIFF	630-232-6840
KANE CO. OFFICE OF EMERGENCY MANAGEMENT	DONALD BRYANT, DIRECTOR	630-232-5985
VILLAGE OF HAMPSHIRE PUBLIC WORKS	COLIN CHRISTENSEN, DIRECTOR	847-683-4044
VILLAGE OF HAMPSHIRE POLICE DEPARTMENT	BRIAN THOMPSON, CHIEF	847-683-2240
HAMPSHIRE TOWNSHIP HIGHWAY DEPARTMENT	STAN WALKER, COMMISSIONER	847-683-4485
HAMPSHIRE FIRE PROTECTION DISTRICT	BILL ROBINSON, CHIEF	847-683-2629
COMMUNITY UNIT SCHOOL DISTRICT 300	MICHAEL BREGY, SUPERINTENDENT	847-551-8410

LIMITATIONS OF CONSTRUCTION

THE CONTRACTOR SHALL COORDINATE THE ITEMS OF WORK IN ORDER TO KEEP HAZARDS AND TRAFFIC INCONVENIENCES TO A MINIMUM, AS SPECIFIED BELOW:

1. IF THERE ARE CONSTRUCTION OPERATION COMPLETE OUTSIDE OF THE DURATION OF THE ROADWAY CLOSURE, THOSE CONSTRUCTION OPERATIONS WILL BE CONDUCTED SO ONE LANE IN EACH DIRECTION ON WALKER ROAD REMAIN OPEN AT ALL TIMES.

2. THE CONTRACTOR SHALL PROVIDE, ERECT, AND MAINTAIN ALL THE NECESSARY SIGNS, BARRICADES, CONES, DRUMS, AND LIGHTS FOR THE WARNING AND PROTECTION OF TRAFFIC, AS REQUIRED BY SECTIONS 107 AND 701 THROUGH 703 OF THE STANDARD SPECIFICATIONS, AND AS MODIFIED.

3. THE CONTRACTOR SHALL FURNISH AND ERECT "ROAD CONSTRUCTION AHEAD" SIGNS (W20-1 (O)-48) AT BOTH ENDS OF THE PROJECT AND AT ALL SIDE ROADS WITHIN THE LIMITS OF THIS SECTION WHEN WORKING IN THE VICINITY OF THE SIDE ROAD INTERSECTION.

OFF-PEAK HOURS

FOR CONSTRUCTION OPERATIONS OUTSIDE THE DESIGNATED DETOUR PERIOD, THE "OFF-PEAK" HOURS ARE DEFINED AS THE DAYTIME HOURS FROM 9:00 A.M. TO 3:00 P.M. AND NIGHT TIME HOURS FROM 9:00 P.M. TO 6:00 A.M., MONDAY THROUGH FRIDAY. THE CONTRACTOR MAY REQUEST IN WRITING FOR THESE HOURS TO BE EXTENDED.

OFF- PEAK HOURS

FOR CONSTRUCTION OPERATIONS OUTSIDE THE DESIGNATED DETOUR PERIOD, THE "OFF- PEAK" HOURS ARE DEFINED AS THE DAYTIME HOURS FROM 9:00 A.M. TO 3:00 P.M. AND NIGHT TIME HOURS FROM 9:00 P.M. TO 6:00 A.M., MONDAY THROUGH FRIDAY. THE CONTRACTOR MAY REQUEST IN WRITING FOR THESE HOURS TO BE EXTENDED.

KEEPING ROADS OPEN TO TRAFFIC

THE CONTRACTOR SHALL SCHEDULE HIS SEQUENCE OF OPERATIONS TO PERMIT THE CONSTRUCTION OF THIS SECTION WITH THE LEAST INCONVENIENCE TO THE TRAVELING PUBLIC. THE CONTRACTOR'S SCHEDULE SHALL REFLECT THE FOLLOWING REQUIREMENTS AND SEQUENCE OF CONSTRUCTION. THESE REQUIREMENTS FOLLOW THE SUGGESTED TRAFFIC CONTROL PLAN INCLUDED IN THE DRAWINGS.

1. WALKER ROAD MAY BE COMPLETELY CLOSED TO TRAFFIC FOR THE DURATION SPECIFIED IN THE CONTRACT DOCUMENTS.

TRAILER MOUNTED ARROW BOARD

UNLESS OTHERWISE REQUIRED BY A SPECIFIED TRAFFIC CONTROL STANDARD, THE USE OF A TRAILER MOUNTED ARROW BOARD(S) ARE NOT ANTICIPATED FOR THIS PROJECT.

SEQUENCE OF CONSTRUCTION

IN GENERAL, THE STAGING OF CONSTRUCTION FOR THIS SECTION SHALL BE AS FOLLOWS:

MAJOR WORK ITEMS - STAGE 1 (ROADWAY CLOSURE) WALKER ROAD

- COORDINATE UTILITY RELOCATES
- SET UP CHANGEABLE MESSAGE BOARD
- SET UP DETOUR AS DETAILED IN THE PLANS
- SET UP TEMPORARY EROSION CONTROL MEASURES
- REMOVE EXISTING PAVEMENTS AND BRIDGE STRUCTURE (SEE REMOVAL PLANS)
- CONSTRUCT THE PROPOSED BRIDGE, SUBGRADE, AGGREGATE BASE COURSES
- CONSTRUCT ENTRANCE CULVERTS AND UNDERDRAINS
- CONSTRUCT SHOULDERS AND PAVEMENTS (TO SURFACE)
- CONSTRUCT GUARDRAILS

MAJOR WORK ITEMS - STAGE 2 - RESTORATION

THESE OPERATIONS MAY TAKE PLACE AFTER THE ROADWAY IS OPEN TO TRAFFIC. THE CONTRACTOR SHALL BE RESPONSIBLE FOR COMPLETING THESE WORK OPERATIONS UNDER THE APPROPRIATE IDOT TRAFFIC CONTROL STANDARD. THESE STANDARDS WILL BE NOT BE MEASURED SEPARATELY FOR PAYMENT BUT SHALL BE CONSIDERED INCLUDED IN THE COST FOR TRAFFIC CONTROL AND PROTECTION, SPECIAL.

- PLACE PERMANENT RESTORATION
- PLACE GUARDRAIL MARKER
- PLACE PERMANENT PAVEMENT MARKINGS••
- PLACE PERMANENT SIGNAGE (BY OTHERS)
- FINALIZE PUNCH LIST AND SITE CLEANUP

•• IF CONTRACTOR ELECTS TO COMPLETE PERMANENT PAVEMENT MARKING OUTSIDE OF THE CLOSURE PERIOD, THEN THE CONTRACTOR SHALL PLACE THE APPROPRIATE TEMPORARY PAVEMENT MARKINGS. ALL MARKINGS ON THE PERMANENT SURFACES SHALL BE TAPE. THERE WILL BE NO ADDITIONAL COMPENSATION FOR THE TEMPORARY PAVEMENT MARKINGS.

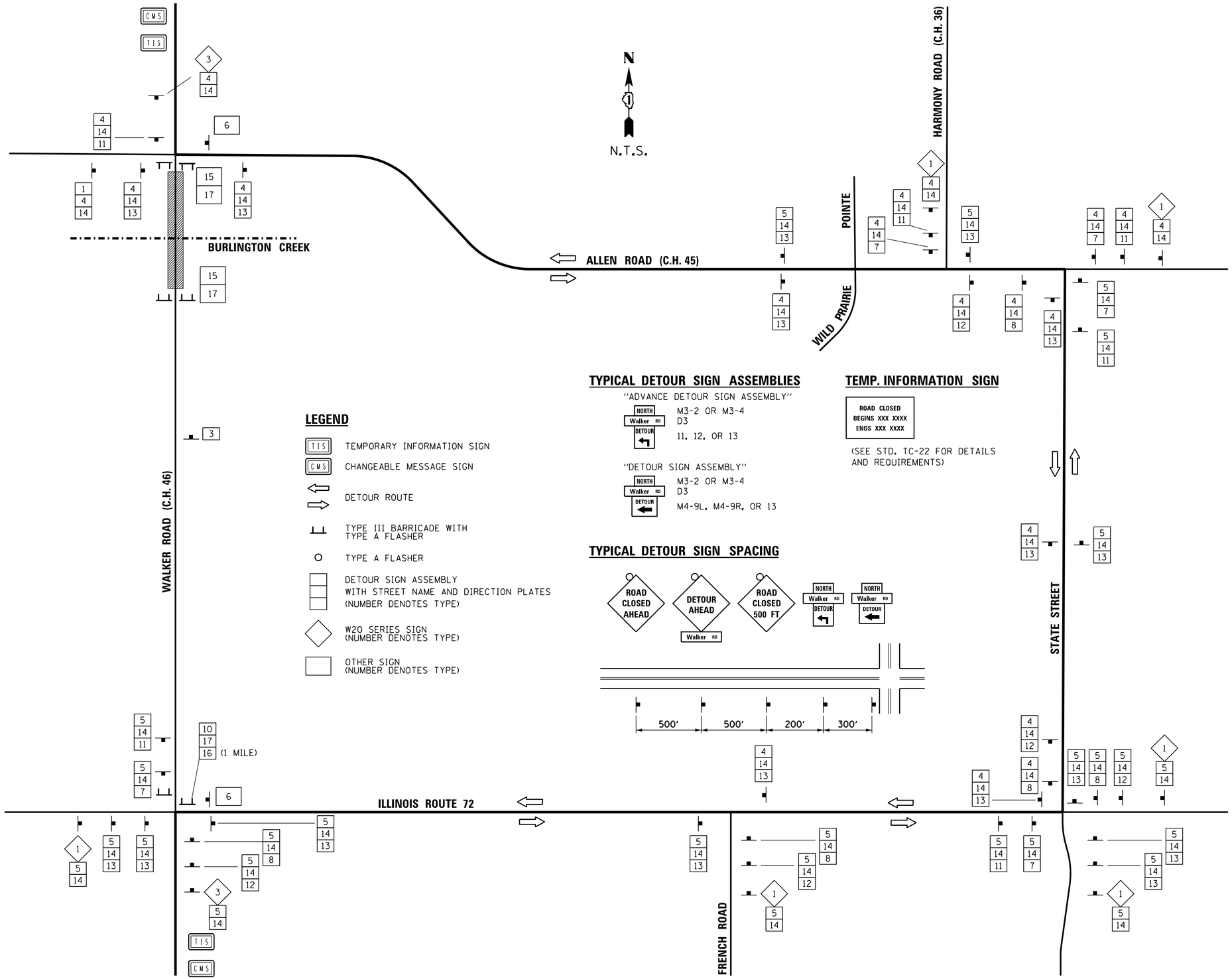

LEGEND

- TIS — TEMPORARY INFORMATION SIGN
- CMS — CHANGEABLE MESSAGE SIGN
- DETOUR ROUTE
- TYPE III BARRICADE WITH TYPE A FLASHER
- TYPE A FLASHER
- DETOUR SIGN ASSEMBLY WITH STREET NAME AND DIRECTION PLATES (NUMBER DENOTES TYPE)
- W20 SERIES SIGN (NUMBER DENOTES TYPE)
- OTHER SIGN (NUMBER DENOTES TYPE)

TYPICAL DETOUR SIGN ASSEMBLIES

"ADVANCE DETOUR SIGN ASSEMBLY"

NORTH / Walker RD / DETOUR — M3-2 OR M3-4, D3, 11, 12, OR 13

"DETOUR SIGN ASSEMBLY"

NORTH / Walker RD / DETOUR — M3-2 OR M3-4, D3, M4-9L, M4-9R, OR 13

TEMP. INFORMATION SIGN

ROAD CLOSED
BEGINS XXX XXXX
ENDS XXX XXXX

(SEE STD. TC-22 FOR DETAILS AND REQUIREMENTS)

TYPICAL DETOUR SIGN SPACING

SCHEDULE OF DETOUR SIGNS

SIGN NO.	SIGN	MUTCD CODE	SIZE
1	DETOUR AHEAD	W20-2	48"×48"
2	ROAD CLOSED AHEAD	W20-3	48"×48"
3	ROAD CLOSED 500 FT	W20-3	48"×48"
4	SOUTH	M3-3	24"×12"
5	NORTH	M3-1	24"×12"
6	END DETOUR	M4-8A	24"×18"
7	DETOUR ←	M4-9L	30"×24"
8	DETOUR →	M4-9R	30"×24"
9	← DETOUR	M4-10L	48"×18"
10	DETOUR →	M4-10R	48"×18"
11	DETOUR ↰	-	21"×15"
12	DETOUR ↱	-	21"×15"
13	DETOUR ↑	-	21"×15"
14	Walker RD	D3	48"±×12" (ORANGE)
15	ROAD CLOSED	R11-2	48"×30"
16	BRIDGE OUT X MILES AHEAD LOCAL TRAFFIC ONLY	R11-3B	60"×30"
17	BRIDGE OUT	R11-2•	48"×30"
18	ROAD CLOSED TO THRU TRAFFIC	R11-4	60"×30"

FILE NAME = W:\Projects\2013\130174 Walker-Phil\cadd\Civil\Dgn\Sht\DETOUR_02.dgn

WILLS BURKE KELSEY ASSOCIATES LTD.
116 West Main Street, Suite 201
St. Charles, Illinois 60174

USER NAME = nparris	DESIGNED -	REVISED -	
	DRAWN -	REVISED -	
PLOT SCALE = 1:600	CHECKED -	REVISED -	
PLOT DATE = 9/8/2014	DATE -	REVISED -	

STATE OF ILLINOIS
DEPARTMENT OF TRANSPORTATION

DETOUR PLAN

SCALE: | SHEET NO. 2 OF 2 SHEETS | STA. | TO STA.

C.H. RTE.	SECTION	COUNTY	TOTAL SHEETS	SHEET NO.
46	08-00133-01-BR	KANE	87	18
		CONTRACT NO.XXXXXX		
		ILLINOIS FED. AID PROJECT		

LEGEND

- HMA PAVEMENT REMOVAL
- AGGREGATE REMOVAL
- STRUCTURE REMOVAL
- GUARDRAIL REMOVAL
- CULVERT PIPE REMOVAL
- RETAINING WALL REMOVAL
- REM — SIGN REMOVAL (BY OTHERS)

01-19-200-003
DUMOULIN, WILLIAM L REVOC TR, TRUSTEE
16N393 WALKER RD

SIGN REMOVAL NOTE:

1. KANE COUNTY DIVISION OF TRANSPORTATION (KDOT) SHALL REMOVE ALL EXISTING SIGNS, NAME PLATES AND POST FROM WITHIN THE PROJECT LIMITS. THE CONTRACTOR SHALL COORDINATE ALL SIGN REMOVAL WITH THE ENGINEER.

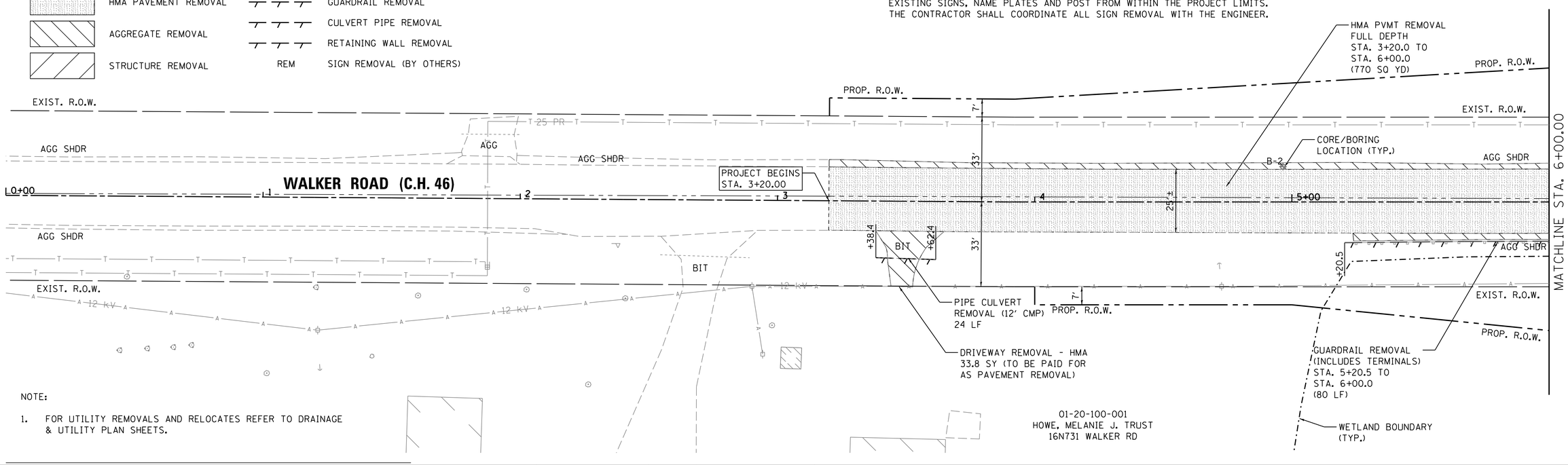

NOTE:

1. FOR UTILITY REMOVALS AND RELOCATES REFER TO DRAINAGE & UTILITY PLAN SHEETS.

01-20-100-001
HOWE, MELANIE J. TRUST
16N731 WALKER RD

01-19-200-003
DUMOULIN, WILLIAM L REVOC TR, TRUSTEE
16N393 WALKER RD

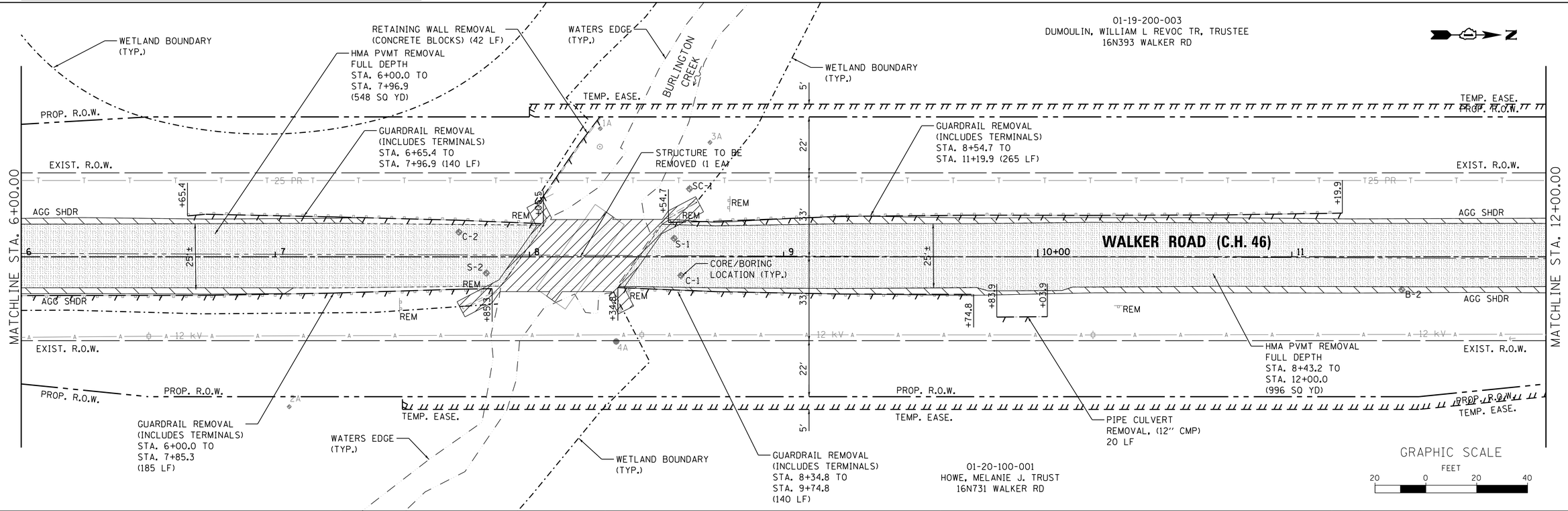

01-20-100-001
HOWE, MELANIE J. TRUST
16N731 WALKER RD

GRAPHIC SCALE
FEET
20 0 20 40

FILE NAME = W:\Projects\2013\130174 WalkerPhil\cadd\Civil\Dgn\Sht\REM.01.dgn

WILLS BURKE KELSEY ASSOCIATES LTD.
116 West Main Street, Suite 201
St. Charles, Illinois 60174

USER NAME = nparris	DESIGNED -	REVISED -
	DRAWN -	REVISED -
PLOT SCALE = 1:20	CHECKED -	REVISED -
PLOT DATE = 9/8/2014	DATE -	REVISED -

STATE OF ILLINOIS
DEPARTMENT OF TRANSPORTATION

REMOVAL PLAN

SCALE: 1"=20' | SHEET NO. 1 OF 2 SHEETS | STA. 3+20.00 TO STA. 12+00.00

C.H. RTE.	SECTION	COUNTY	TOTAL SHEETS	SHEET NO.
46	08-00133-01-BR	KANE	87	19
		CONTRACT NO.XXXXXX		
		ILLINOIS FED. AID PROJECT		

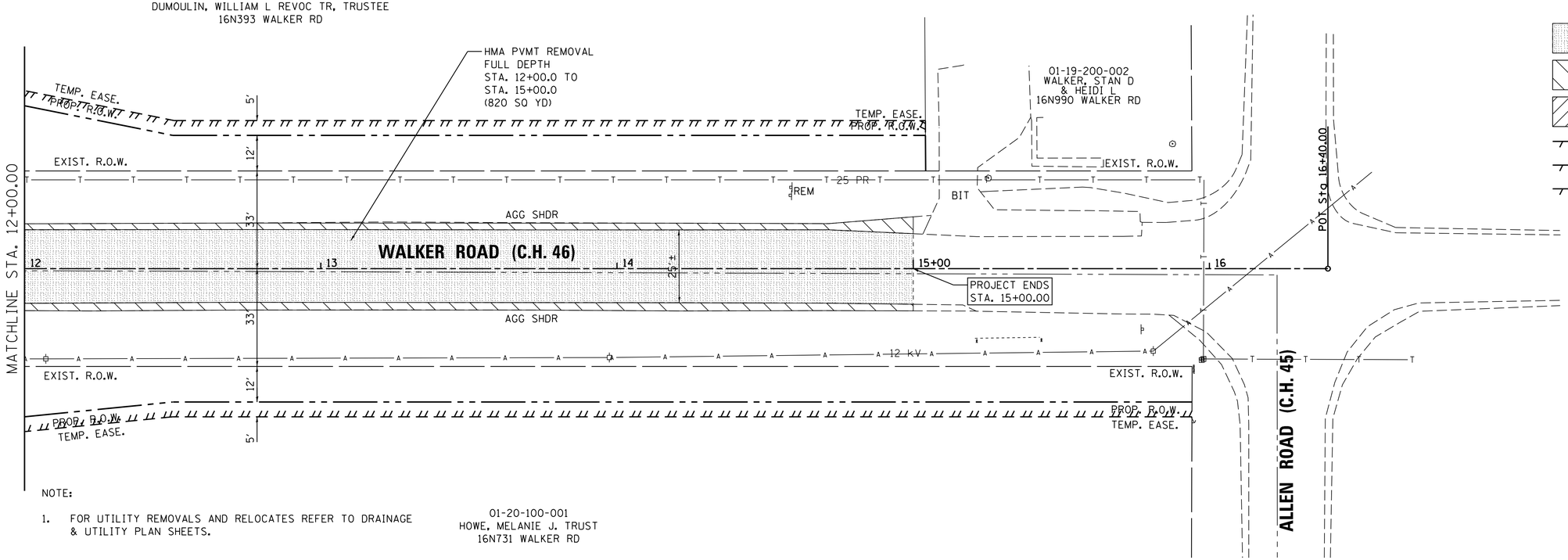

LEGEND

- HMA PAVEMENT REMOVAL
- AGGREGATE REMOVAL
- STRUCTURE REMOVAL
- GUARDRAIL REMOVAL
- CULVERT PIPE REMOVAL
- RETAINING WALL REMOVAL
- REM — SIGN REMOVAL (BY OTHERS)

N

GRAPHIC SCALE
FEET
20 0 20 40

NOTE:

1. FOR UTILITY REMOVALS AND RELOCATES REFER TO DRAINAGE & UTILITY PLAN SHEETS.

FILE NAME = W:\Projects\2013\13017A WalkerPhil\cadd\Civil\Dgn\Sht\REM.02.dgn

WILLS BURKE KELSEY ASSOCIATES LTD.
116 West Main Street, Suite 201
St. Charles, Illinois 60174

USER NAME = nparris	DESIGNED -	REVISED -
	DRAWN -	REVISED -
PLOT SCALE = 1:20	CHECKED -	REVISED -
PLOT DATE = 9/8/2014	DATE -	REVISED -

STATE OF ILLINOIS
DEPARTMENT OF TRANSPORTATION

REMOVAL PLAN

SCALE: 1"=20' | SHEET NO. 2 OF 2 SHEETS | STA. 12+00.00 TO STA. 15+00.00

C.H. RTE.	SECTION	COUNTY	TOTAL SHEETS	SHEET NO.
46	08-00133-01-BR	KANE	87	20
		CONTRACT NO.XXXXXX		
	ILLINOIS	FED. AID PROJECT		

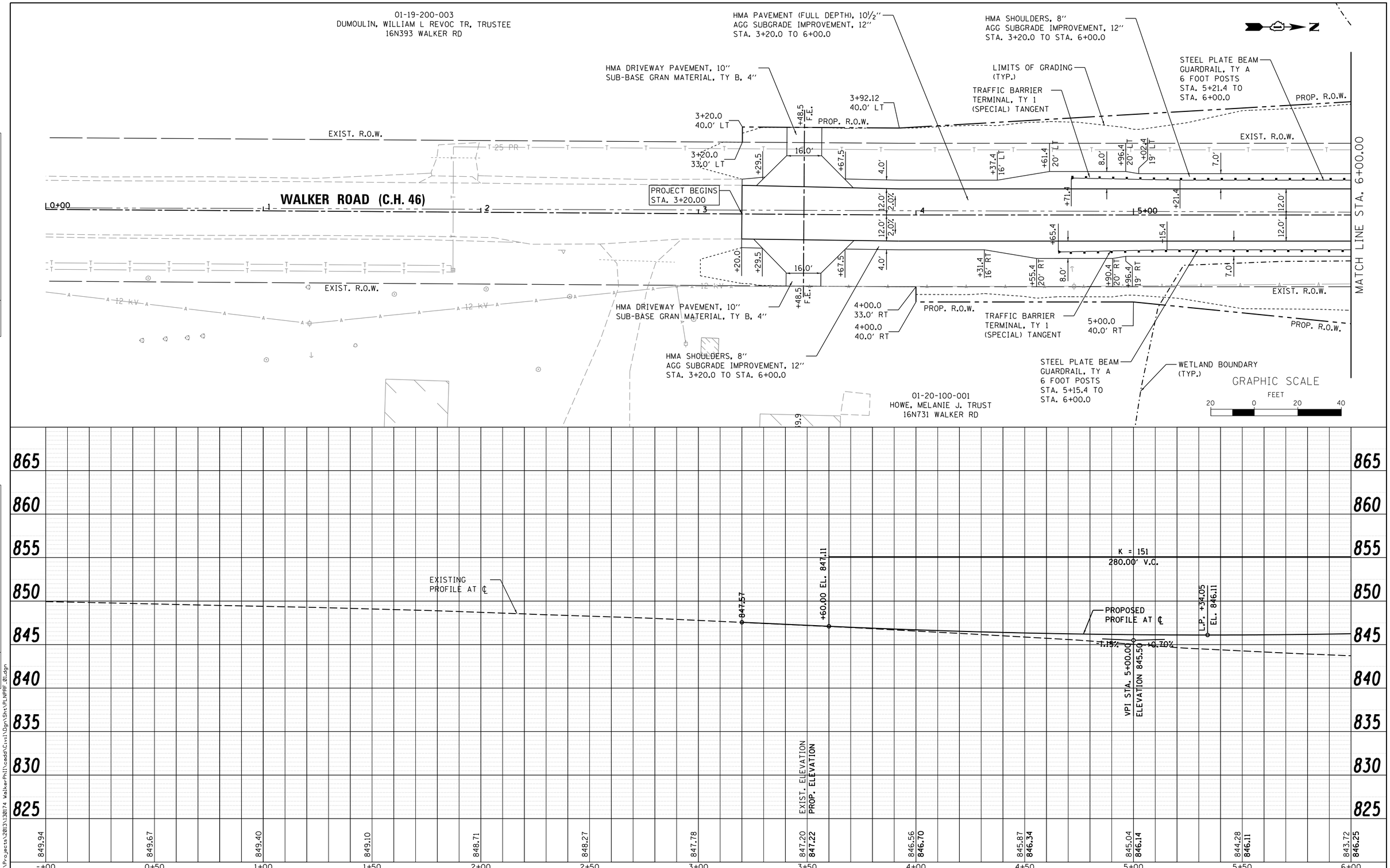

PLAN	BY	DATE
SURVEYED		
PLOTTED		
ALIGNMENT CHECKED		
RT. OF WAY CHECKED		
CADD FILE NAME		
NOTE BOOK NO.		

PROFILE	BY	DATE
SURVEYED		
PLOTTED		
GRADES CHECKED		
BM. NOTED		
STRUCTURE NOTATNS CHKD		
NOTE BOOK NO.		

FILE NAME = W:\Projects\2013\130174 WalkerPhil\cadd\Civil\Dgn\Sht\PLNPRF_01.dgn

WILLS BURKE KELSEY ASSOCIATES LTD.
116 West Main Street, Suite 201
St. Charles, Illinois 60174

USER NAME = nparris	DESIGNED -	REVISED -
	DRAWN -	REVISED -
PLOT SCALE = 1:20	CHECKED -	REVISED -
PLOT DATE = 9/8/2014	DATE -	REVISED -

STATE OF ILLINOIS
DEPARTMENT OF TRANSPORTATION

PLAN & PROFILE

SCALE: 1"=20' | SHEET NO. 1 OF 3 SHEETS | STA. 3+20.00 TO STA. 6+00.00

C.H. RTE.	SECTION	COUNTY	TOTAL SHEETS	SHEET NO.
46	08-00133-01-BR	KANE	87	21

CONTRACT NO.XXXXXX

ILLINOIS FED. AID PROJECT

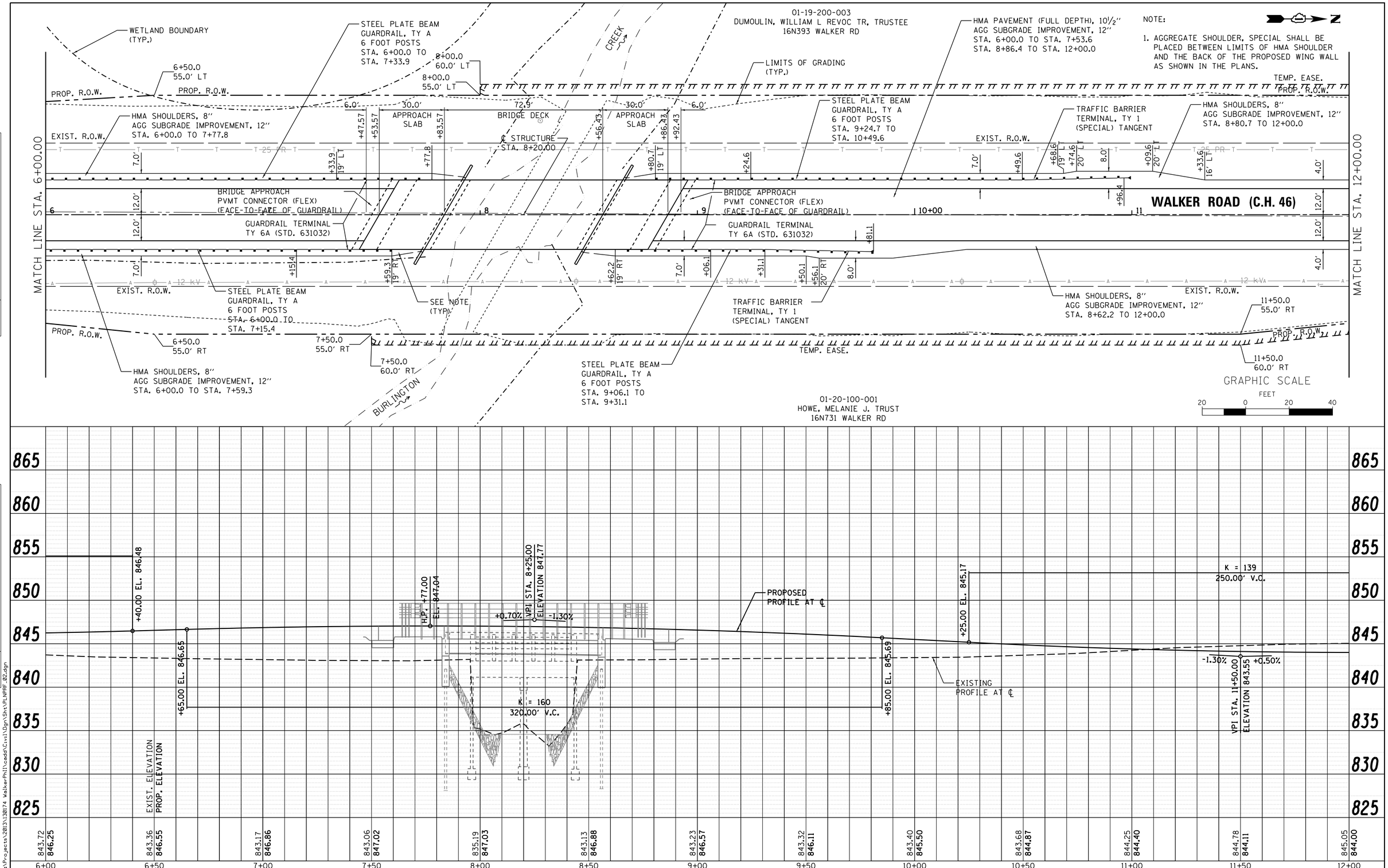

PLAN — SURVEYED / PLOTTED / ALIGNMENT CHECKED / RT. OF WAY CHECKED / CADD FILE NAME / NOTE BOOK NO. ____ / BY / DATE

PROFILE — SURVEYED / PLOTTED / GRADES CHECKED / BRK. NOTED / STRUCTURE NOTATNS CHKD / NOTE BOOK NO. ____ / BY / DATE

FILE NAME = W:\Projects\2013\130174 WalkerPhII\cadd\Civil\Dgn\Sht\PLNPRF_02.dgn

WILLS BURKE KELSEY ASSOCIATES LTD.
116 West Main Street, Suite 201
St. Charles, Illinois 60174

USER NAME = nparris	DESIGNED -	REVISED -	
	DRAWN -	REVISED -	
PLOT SCALE = 1:20	CHECKED -	REVISED -	
PLOT DATE = 9/8/2014	DATE -	REVISED -	

STATE OF ILLINOIS
DEPARTMENT OF TRANSPORTATION

PLAN & PROFILE

SCALE: 1"=20' | SHEET NO. 2 OF 3 SHEETS | STA. 6+00.00 TO STA. 12+00.00

C.H. RTE.	SECTION	COUNTY	TOTAL SHEETS	SHEET NO.
46	08-00133-01-BR	KANE	87	22
		CONTRACT NO.XXXXXX		
		ILLINOIS FED. AID PROJECT		

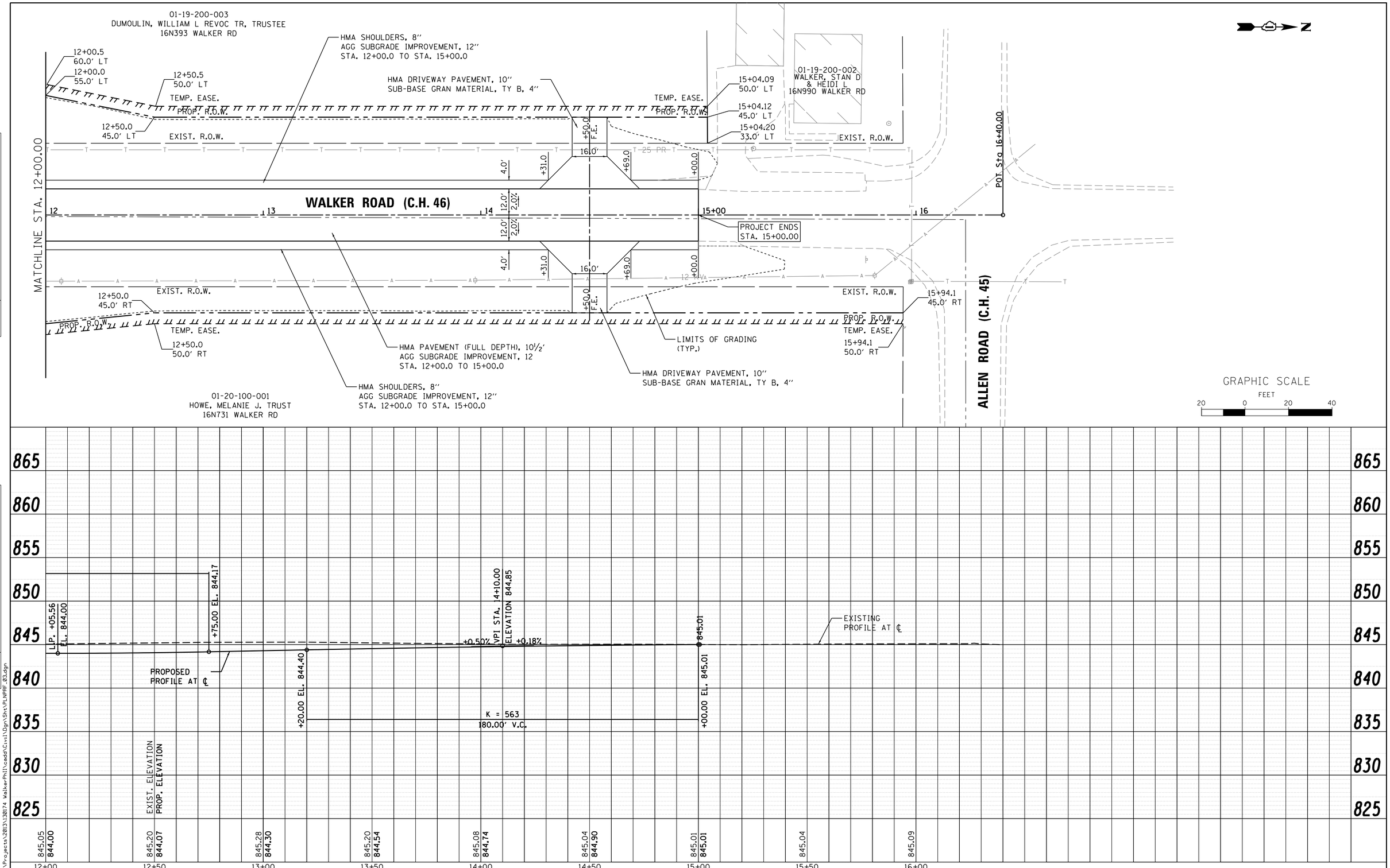

PLAN		BY	DATE
SURVEYED			
PLOTTED			
ALIGNMENT CHECKED			
RT. OF WAY CHECKED			
CADD FILE NAME			
NOTE BOOK NO.			

PROFILE		BY	DATE
SURVEYED			
PLOTTED			
GRADES CHECKED			
BLM. NOTED			
STRUCTURE NOTATNS CHKD			
NOTE BOOK NO.			

FILE NAME = W:\Projects\2013\130174 WalkerPhil\cadd\Civil\Dgn\Sht\PLNPRF_03.dgn

WILLS BURKE KELSEY ASSOCIATES LTD.
116 West Main Street, Suite 201
St. Charles, Illinois 60174

USER NAME = nparris	DESIGNED -	REVISED -
	DRAWN -	REVISED -
PLOT SCALE = 1:20	CHECKED -	REVISED -
PLOT DATE = 9/8/2014	DATE -	REVISED -

STATE OF ILLINOIS
DEPARTMENT OF TRANSPORTATION

PLAN & PROFILE

SCALE: 1"=20' | SHEET NO. 3 OF 3 SHEETS | STA. 12+00.00 TO STA. 15+00.00

C.H. RTE.	SECTION	COUNTY	TOTAL SHEETS	SHEET NO.
46	08-00133-01-BR	KANE	87	23
		CONTRACT NO.XXXXXX		
		ILLINOIS FED. AID PROJECT		

LEGEND

- SEEDING, CL 2A W/ EROSION CONTROL BLANKET
- SEEDING, CL 4A W/ EROSION CONTROL BLANKET
- SEEDING, CL 4B W/ EROSION CONTROL BLANKET
- RIPRAP W/FILTER FABRIC (SIZE AS NOTED ON PLAN)
- INLET & PIPE PROTECTION
- TEMPORARY DITCH CHECK (ROLLED EXCELSIOR)
- PERIMETER EROSION BARRIER (SILT FENCE)
- TURBIDITY BARRIER
- PROPOSED DITCH W/ FLOW ARROW
- AGGREGATE DITCH CHECK (TEMPORARY)

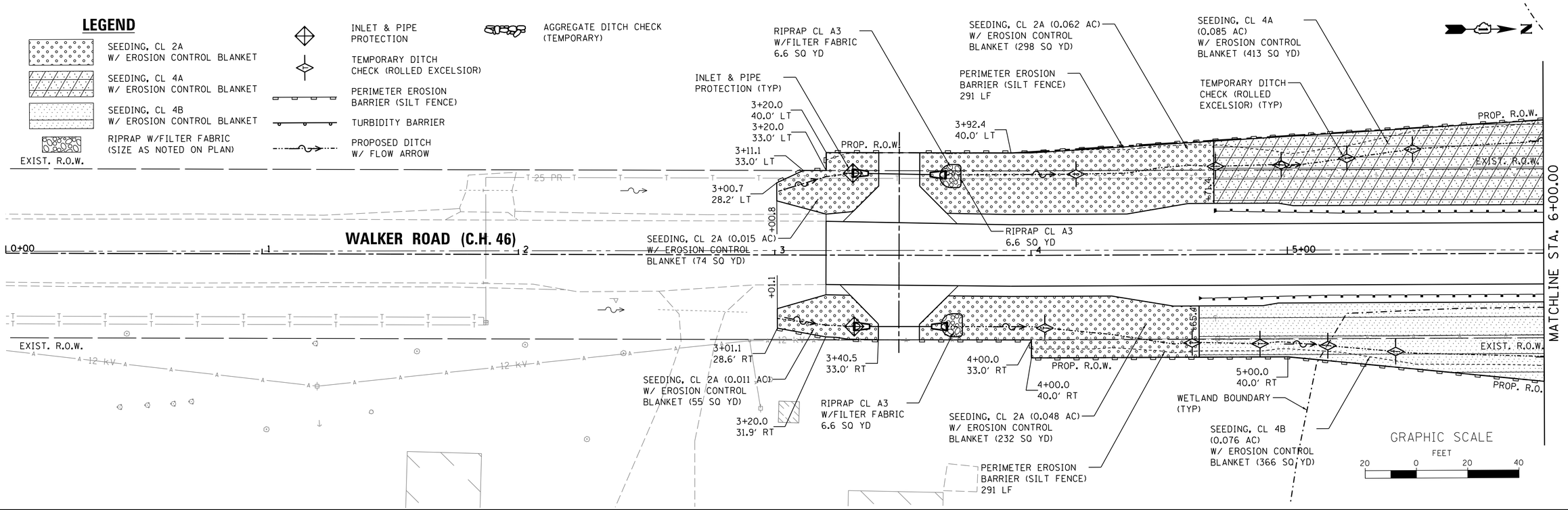

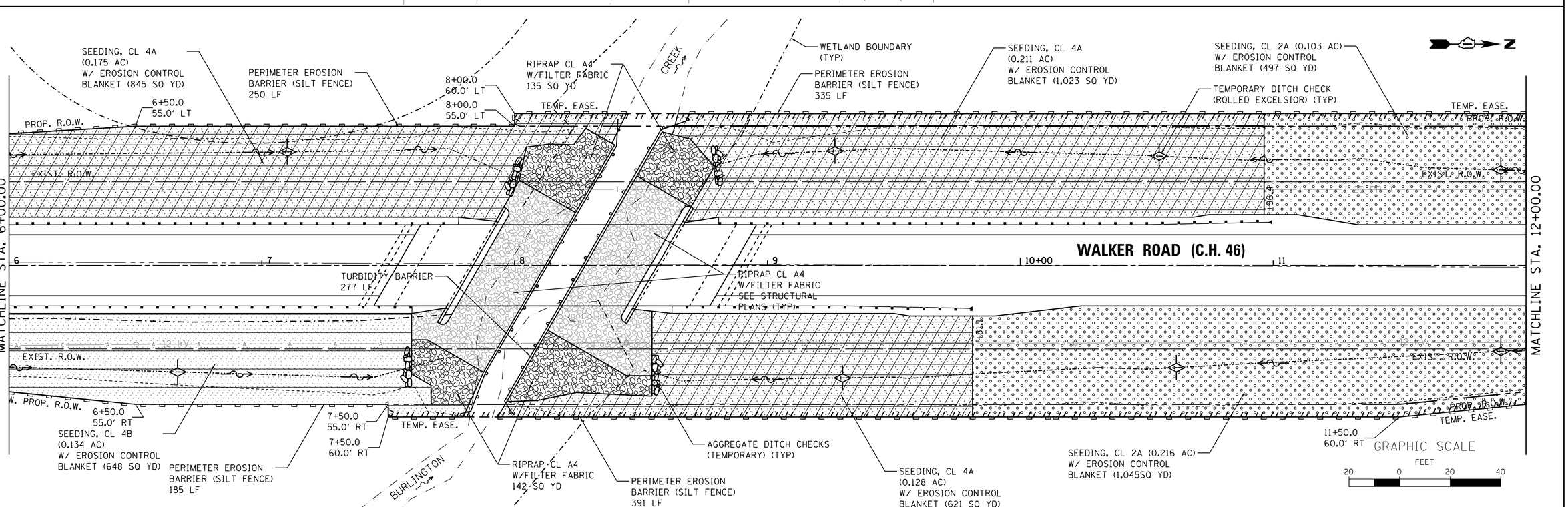

FILE NAME = W:\Projects\2013\130174 WalkerPhil\cadd\Civil\Dgn\Sht\ERO.01.dgn

WILLS BURKE KELSEY ASSOCIATES LTD.
116 West Main Street, Suite 201
St. Charles, Illinois 60174

USER NAME = nparris	DESIGNED -	REVISED -
	DRAWN -	REVISED -
PLOT SCALE = 1:20	CHECKED -	REVISED -
PLOT DATE = 9/8/2014	DATE -	REVISED -

STATE OF ILLINOIS
DEPARTMENT OF TRANSPORTATION

EROSION & SEDIMENT CONTROL PLAN

SCALE: 1"=20' | SHEET NO. 1 OF 5 SHEETS | STA. 3+20.00 TO STA. 12+00.00

C.H. RTE.	SECTION	COUNTY	TOTAL SHEETS	SHEET NO.
46	08-00133-01-BR	KANE	87	24
		CONTRACT NO.XXXXXX		
		ILLINOIS FED. AID PROJECT		

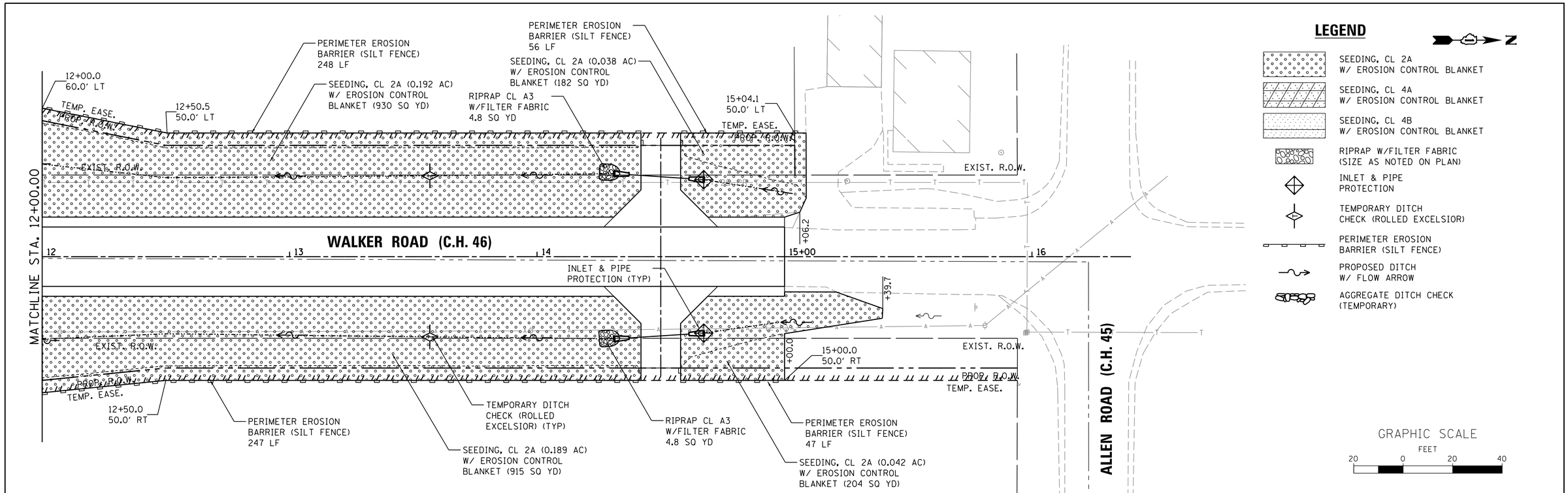

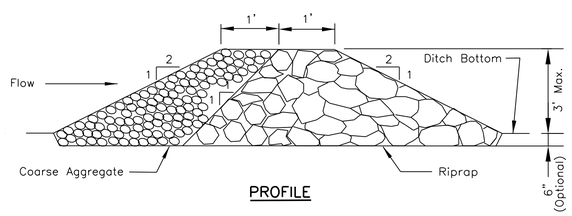

PROFILE

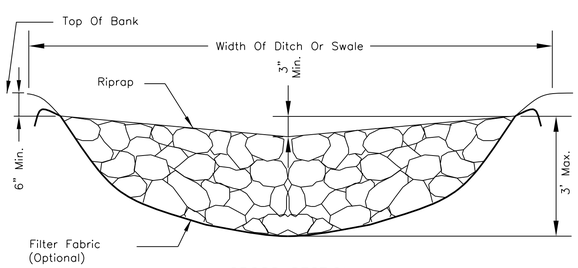

CROSS SECTION
CENTERLINE LOOKING DOWNSTREAM

NOTES:

1. FILTER FABRIC SHALL MEET THE REQUIREMENTS OF MATERIAL SPECIFICATION 592 GEOTEXTILE, TABLE 1 OR 2, CLASS I, II, OR IV AND SHALL BE PLACED OVER THE CLEARED AREA PRIOR TO THE PLACING OF ROCK.
2. COARSE AGGREGATE SHALL MEET ONE OF THE FOLLOWING IDOT GRADATIONS, CA-1, CA-2, CA-3, OR CA-4.
3. RIPRAP SHALL MEET IDOT GRADATION RR-3 OR RR-4 AND MEET QUALITY DESIGNATION A.
4. COARSE AGGREGATE AND RIPRAP SHALL BE PLACED ACCORDING TO CONSTRUCTION SPECIFICATION 25 ROCKFILL USING PLACEMENT METHOD 1 AND CLASS III COMPACTION.
5. FOR ADDED STABILITY, THE BASE OF THE DAM MAY BE KEYED 6 INCHES INTO THE SOIL.
6. MAXIMUM DRAINAGE AREA TO EACH DAM IS 10 ACRES.
7. ROCK CHECK DAM-COARSE AGGREGATE IL-605CA MAY BE USED FOR DRAINAGE AREAS UNDER 2 ACRES.

STABILIZATION TYPE	JAN.	FEB.	MAR.	APR.	MAY	JUNE	JULY	AUG.	SEPT.	OCT.	NOV.	DEC.
PERMANENT SEEDING				A		•	•	A				
DORMANT SEEDING	B										B	
TEMPORARY SEEDING			C									
EROSION CONTROL	D											

A. CLASS 2A
CLASS 4A
CLASS 4B

B. INCREASE SEEDING RATES BY 25% WHEN DORMANT SEEDING (NOT ANTICIPATED)

C. TEMPORARY SEEDING (PERENNIAL RYE GRASS, SPRING OATS)

D. EROSION CONTROL BLANKET (EXCELSIOR) (PERMANENT SEED AREAS ONLY)

• IRRIGATION MAY BE NEEDED DURING JUNE AND JULY

NOTE: SEEDING TO BE COMPLETED PER REQUIREMENTS OF SECTION 250 OF THE IDOT STANDARD SPECIFICATIONS FOR ROAD AND BRIDGES AND THE SPECIAL PROVISIONS.

AGGREGATE DITCH CHECK

STD. IL-605CA
(ROCK CHECK DAM - COARSE AGGREGATE)

FILE NAME = W:\Projects\2013\130174 WalkerPhil\cadd\Civil\Dgn\Sht\ER0.02.dgn

WILLS BURKE KELSEY ASSOCIATES LTD.
116 West Main Street, Suite 201
St. Charles, Illinois 60174

USER NAME = nparris	DESIGNED -	REVISED -
	DRAWN -	REVISED -
PLOT SCALE = 1:20	CHECKED -	REVISED -
PLOT DATE = 9/8/2014	DATE -	REVISED -

STATE OF ILLINOIS
DEPARTMENT OF TRANSPORTATION

EROSION & SEDIMENT CONTROL PLAN

SCALE: 1"=20' | SHEET NO. 2 OF 5 SHEETS | STA. 12+00.00 TO STA. 15+00.00

C.H. RTE.	SECTION	COUNTY	TOTAL SHEETS	SHEET NO.
46	08-00133-01-BR	KANE	87	25

CONTRACT NO.XXXXXX

ILLINOIS FED. AID PROJECT

EROSION CONTROL INSPECTION

ALL EROSION CONTROL MEASURES MUST BE INSPECTED WEEKLY AND AFTER EACH ½" RAIN EVENT.

WINTER SHUT DOWN

A WINTER SHUT DOWN IS NOT ANTICIPATED FOR THIS PROJECT. BUT IN THE EVENT THAT UNAVOIDABLE CIRCUMSTANCE REQUIRE A WINTER SHUT DOWN, THE CONDITION OF THE CONSTRUCTION SITE FOR WINTER SHUTDOWN SHALL BE ADDRESSED EARLY IN THE FALL GROWING SEASON SO THAT SLOPES AND OTHER BARE EARTH AREAS MAY BE STABILIZED WITH TEMPORARY AND/OR PERMANENT VEGETATIVE COVER FOR PROPER EROSION AND SEDIMENT CONTROL. ALL OPEN AREAS THAT ARE TO REMAIN IDLE THROUGHOUT THE WINTER SHALL RECEIVE TEMPORARY EROSION CONTROL MEASURES INCLUDING TEMPORARY SEEDING, MULCHING AND/OR EROSION CONTROL BLANKET PRIOR TO THE END OF THE FALL GROWING SEASON. THE AREAS TO BE WORKED BEYOND THE END OF THE GROWING SEASON MUST INCORPORATE SOIL STABILIZATION MEASURES THAT DO NOT RELY ON VEGETATIVE COVER SUCH AS EROSION CONTROL BLANKET AND HEAVY MULCHING.

TEMPORARY DITCH CHECKS

TEMPORARY DITCH CHECKS WILL BE REQUIRED AT THOSE LOCATIONS WHERE THE CONTRACTORS OPERATIONS REQUIRE TEMPORARY OR PERMENTENT DITCHES. THE LOCATION OF TEMPORARY DITCH CHECKS ARE SHOWN ON THE PLANS. THE EXACT LOCATION MAY REQUIRE FIELD ADJUSTMENT AND WILL BE COORDINATED IN THE FIELD WITH THE ENGINEER. THE QUANTITIES INCLUDE A PLAN ALLOWANCE OF TWO (2) ADDITIONAL TEMPORARY DITCH CHECKS FOR MAINTENANCE PURPOSES. TEMPORARY DITCH CHECKS SHALL BE CONSTRUCTED AS SPECIFIED IN SECTION 280 OF THE STANDARD SPECIFICATIONS FOR ROAD AND BRIDGE CONSTRUCTION, LATEST EDITION.

PERIMETER EROSION BARRIER (SILT FENCE)

PERIMETER EROSION CONTROL BARRIER (SILT FENCE) SHALL BE PLACED AT THE LOCATIONS SHOWN ON THE PLANS. THE PERIMETER EROSION CONTROL BARRIER SHALL BE CONSTRUCTED AS DETAILED ON IDOT STANDARD 280001 AND AS SPECIFIED IN SECTION 280 OF THE STANDARD SPECIFICATIONS FOR ROAD AND BRIDGE CONSTRUCTION, LATEST EDITION.

STOCK PILE LOCATIONS AND PROTECTING STOCK PILE AREAS

STOCK PILES SHOULD NOT BE PLACED IN OR NEAR CRITICAL AREAS, OR AREAS THAT HAVE HIGH POTENTIAL FOR CONTRIBUTING SEDIMENTS TO STROMWATER FACILTIES.

CONTRACTOR MAY OPT TO STOCK PILE MATERIAL. STAGING OF THE PROJECT IS AT THE DISCRETION OF THE CONTRACTOR AND COORDINATION OF STOCK PILES WILL BE WITH KANE COUNTY DIVISION OF TRANSPORTATION (KDOT) AND KANE-DUPAGE SOIL AND WATER CONSERVATION DISTRICT (KDSWCD). STOCKPILES OF SOIL AND OTHER CONSTRUCTION MATERIALS TO REMAIN IN PLACE MORE THAN THREE (3) DAYS SHALL BE FURNISHED WITH EROSION AND SEDIMENT CONTROL MEASURES (I.E. PERIMETER SILT FENCE). STOCKPILES, NOT BEING ACTIVELY WORKED AND TO REMAIN IN PLACE FOR 7 DAYS OR MORE SHALL RECEIVE TEMPORARY SEEDING.

STABILIZED CONSTRUCTION AREA

TEMPORARY STABILIZATION OF THE CONSTRUCTION AREA SHOULD TAKE PLACE AT THE END OF EACH WORK DAY.

PERMENANT STABILIZATION OF THE CONSTRUCTION AREA SHALL BE COMPLETED WITHIN 7 DAYS OF FINAL GRADING.

WORK IN FLOWING WATER

NO WORK SHALL BE PERFORMED IN FLOWING WATER. WORK IN AND NEAR THE CRITICAL AREAS SHOULD BE ISOLATED FROM CONCENTRATED FLOWS OR STREAM FLOW. ONCE WORK IN THIS AREA BEGINS, PRIORITY SHALL BE GIVEN TO THE COMPLETION OF THE WORK AND FINAL STABILIZATION OF ALL DISTURBED AREAS

CONTRACTOR SUBMITTAL

MEANS AND METHODS TO CONSTRUCT THE BRIDGE, CHANNEL AND OTHER APPURTENANT WORK IS THE CONTRACTORS RESPONSIBILITY. THE CONTRACTOR IS REQUIRED TO SUBMIT TO KDSWCD FOR APPROVAL ALL DRAWINGS AND/OR DETAILS SHOWING THE EXACT SEQUENCING, METHODS, AND LOCATIONS OF THE COFFERDAMS WHICH WILL INLCUDE DEWATERING AND FILTRATION METHODS.

KEEPING PAVEMENTS CLEAN

THE CONTRACTOR WILL KEEP ALL PERMANENT PAVEMENT SURFACES CLEAN OF DIRT OR CONSTRUCTION DEBRIS. THE PAVEMENT SHALL BE CLEANED AT THE END OF EACH DAYS OPERATION OR MORE FREQUENTLY AS REQUIRED BY THE ENGINEER IF THE DEBRIS IS DEEMED TO BE A HAZARD TO THE MOTORING PUBLIC.

STABILIZED CONSTRUCTION ENTRANCE

A STABILIZED CONSTRUCTION ENTRANCE IS NOT ANTICIPATED FOR THIS PROJECT. HOWEVER, IF IT IS DETERMINED BY THE ENGINEER OR THE KANE-DUPAGE SOIL AND WATER CONVERSATION DISTRICT THAT THE CONTRACTOR OPERATIONS REQUIRE A STABILIZED ENTRANCE, QUANTITY HAS BEEN INCLUDED IN THE PROJECT TO COMPLETE THIS WORK. THERE WILL BE NO ADJUSTMENT TO THE CONTRACT IF THE ENTRANCE IS NOT CONSTRUCTED. IF REQUIRED, THE CONTRACTOR WILL SUBMIT THE LOCATION AND DETAILS TO KDSWCD FOR APPROVAL.

CONSTRUCTION SEQUENCE NOTES

A) TURBIDITY CURTAINS SHOULD BE PLACED IN THE CREEK PRIOR TO ANY DEMOLITION TO THE BRIDGE DECK AND/OR PIERS.

B) CONSTRUCTION OF EMBANKMENTS AND RIP RAP ARE ANTICIPATED TO REQUIRE WORK WITHIN THE CREEK, WORK MUST BE TIMED TO TAKE PLACE DURING LOW FLOW CONDITIONS.

C) BYPASS IS NOT ANTICIPATED FOR THIS PROJECT. HOWEVER, IF BYPASS IS NECESSARY, THE INLET OF THE HOSE SHALL BE PLACED IN A SUMP PIT AND THE OUTLET PLACED ON A NON-ERODIBLE, ENERGY DISSIPATING SURFACE PRIOR TO REJOINING THE CREEK FLOW.

D) IF DEWATERING THE CONSTRUCTION AREA IS NECESSARY, ALL WATERS SHALL BE FILTERED BY USING FILTER BAGS OR AN ALTERNATIVE MEASURE. WATER MUST HAVE SEDIMENT REMOVED BEFORE BEING ALLOWED TO RETURN TO THE ORIGINAL CREEK.

E) THE SIDE SLOPES MUST BE RESEEDED AND STABILIZED WITH AN APPROPRIATE EROSION CONTROL BLANKET PRIOR TO ACCEPTING FLOWS. THE BOTTOM OF THE SWALE MUST BE BROUGHT BACK TO ITS ORIGINAL GRADE AND STABLE ENOUGH TO ACCEPT FLOWS.

GENERAL NOTES

A) UNLESS OTHERWISE INDICATED, ALL VEGETATIVE AND STRUCTURAL EROSION AND SEDIMENT CONTROL PRACTICES WILL BE CONSTRUCTED ACCORDING TO MINIMUM STANDARDS AND SPECIFICATIONS IN THE ILLINOIS URBAN MANUAL, LATEST EDITION.

B) THE KANE-DUPAGE SOIL AND WATER CONSERVATION DISTRICT (KDSWCD) MUST BE NOTIFIED ONE WEEK PRIOR TO THE PRE-CONSTRUCTION CONFERENCE, ONE WEEK PRIOR TO THE COMMENCEMENT OF LAND DISTURBING ACTIVITIES, AND ONE WEEK PRIOR TO THE FINAL INSPECTION.

C) A COPY OF THE APPROVED EROSION AND SEDIMENT CONTROL PLAN SHALL BE MAINTAINED ON THE SITE AT ALL TIMES.

D) PRIOR TO COMMENCING LAND-DISTURBING ACTIVITIES IN AREAS OTHER THAN INDICATED ON THESE PLANS (INCLUDING BUT NOT LIMITED TO, ADDITIONAL PHASES OF DEVELOPMENT AND OFF-SITE BORROW OR WASTE AREAS) A SUPPLEMENTARY EROSION CONTROL PLAN SHALL BE SUBMITTED TO THE OWNER FOR REVIEW BY THE KDSWCD.

E) THE CONTRACTOR IS RESPONSIBLE FOR INSTALLATION OF ANY ADDITIONAL EROSION CONTROL MEASURES NECESSARY TO PREVENT EROSION AND SEDIMENTATION AS DETERMINED BY THE KDSWCD.

F) DURING DEWATERING OPERATIONS, WATER WILL BE PUMPED INTO SEDIMENT BASINS OR SILT TRAPS. DEWATERING DIRECTLY INTO FIELD TILES, STORMWATER STRUCTURES, OR BURLINGTON CREEK IS PROHIBITED.

G) IT IS THE RESPONSIBILITY OF THE OWNER AND/OR GENERAL CONTRACTOR TO INFORM ANY SUB-CONTRACTOR(S) WHO MAY PERFORM WORK ON THIS PROJECT, OF THE REQUIREMENTS IN IMPLEMENTING AND MAINTAINING THESE EROSION CONTROL PLANS AND THE NATIONAL POLLUTANT DISCHARGE ELIMINATION SYSTEM (NPDES) PERMIT REQUIREMENTS SET FORTH BY THE ILLINOIS EPA.

H) WHERE WORK IS COMPLETE, PERMANENT STABILIZTION SHALL OCCUR WITHIN SEVEN (7) DAYS OF COMPLETION. WHERE WORK HAS TEMPORARILY CEASED FOR FOURTEEN (14) DAYS OR MORE, TEMPORARY STABILIZATION SHALL OCCUR BY THE SEVENTH DAY AFTER WORK HAS CEASED.

I) THE CONTRACTOR IS RESPONSIBLE FOR INDICATING THE CURRENT LOCATION OF THE CONCRETE WASHOUT AND ANY MODIFICATIONS TO THE LOCATIONS OR DETAILS OF EROSION AND SEDIMENT CONTROLS ON THESE PLANS.

J) ALL DROP INLETS ON AND ADJACENT TO THE SITE MUST HAVE SEDIMENT TRAPPING OR CONTAINMENT DEVICE INSTALLED DURING CONSTRUCTION ACTIVITIES. FILTER FABRIC ON ITS OWN IS NOT AN APPROVED METHOD. PREFABRICATED DROP INLET PROTECTION SHOULD BE AS RESTRICTIVE AS THE ILLINOIS URBAN MANUAL STANDARD 861 FOR INLET PROTECTION.

K) IF THE TURBIDITY CURTAIN DOES NOT SUFFICIENTLY CONTAIN SEDIMENT FROM LEAVING THE PROJECT AREA, COFFERDAMS OR OTHER METHODS, TO BE COORDINATED WITH KDSWCD, SHOULD BE USED.

IN-STREAM WORK

A. WORK IN THE WATERWAY SHOULD BE TIMED TO TAKE PLACE DURING LOW OR NO-FLOW CONDITIONS. LOW FLOW CONDITIONS ARE FLOW AT OR BELOW THE NORMAL WATER ELEVATION.

B. THE PLAN WILL BE DESIGNED TO ALLOW FOR THE CONVEYANCE OF THE 2-YEAR PEAK FLOW PAST THE WORK AREA WITHOUT OVERTOPPING THE COFFERDAM. THE CORPS HAS THE DISCRETION TO REDUCE THIS REQUIREMENT IF DOCUMENTED BY THE APPLICANT TO BE INFEASIBLE OR UNNECESSARY.

C. WATER SHALL BE ISOLATED FROM THE IN-STREAM WORK AREA USING A COFFERDAM CONSTRUCTED OF NON-ERODIBLE MATERIALS (STEEL SHEETS, AQUA BARRIERS, RIP RAP AND GEOTEXTILE LINER, ETC.). EARTHEN COFFERDAMS ARE NOT PERMISSIBLE.

D. THE COFFERDAM MUST BE CONSTRUCTED FROM THE UPLAND AREA AND NO EQUIPMENT MAY ENTER FLOWING WATER AT ANY TIME. IF THE INSTALLATION OF THE COFFERDAM CANNOT BE COMPLETED FROM SHORE AND ACCESS IS NEEDED TO REACH THE AREA TO BE COFFERED, OTHER MEASURES, SUCH AS THE CONSTRUCTION OF A CAUSEWAY WILL BE NECESSARY TO ENSURE THAT EQUIPMENT DOES NOT ENTER THE WATER. ONCE THE COFFERDAM IS IN PLACE AND THE ISOLATED AREA IS DEWATERED, EQUIPMENT MAY ENTER THE COFFERED AREA TO PERFORM THE REQUIRED WORK.

E. IF BYPASS PUMPING IS NECESSARY, THE INTAKE HOSE SHALL BE PLACED ON A STABLE SURFACE OR FLOATED TO PREVENT SEDIMENT FROM ENTERING THE HOSE. THE BYPASS DISCHARGE SHALL BE PLACED ON A NON-ERODIBLE, ENERGY DISSIPATING SURFACE PRIOR TO REJOINING THE STREAM FLOW AND SHALL NOT CAUSE EROSION. FILTERING OF BYPASS WATER IS NOT NECESSARY UNLESS THE BYPASS WATER HAS BECOME SEDIMENT-LADEN AS A RESULT OF THE CURRENT CONSTRUCTION ACTIVITIES.

F. DURING DEWATERING OF THE COFFERED WORK AREA, ALL SEDIMENT-LADEN WATER MUST BE FILTERED TO REMOVE SEDIMENT. POSSIBLE OPTIONS FOR SEDIMENT REMOVAL INCLUDE BAFFLE SYSTEMS, ANIONIC POLYMERS SYSTEMS, DEWATERING BAGS, OR OTHER APPROPRIATE METHODS. WATER SHALL HAVE SEDIMENT REMOVED PRIOR TO BEING RE-INTRODUCED TO THE DOWNSTREAM WATERWAY. A STABILIZED CONVEYANCE FROM THE DEWATERING DEVICE TO THE WATERWAY MUST BE IDENTIFIED IN THE PLAN. DISCHARGE WATER IS CONSIDERED CLEAN IF IT DOES NOT RESULT IN A VISUALLY IDENTIFIABLE DEGRADATION OF WATER CLARITY.

G. THE AREA FROM THE TOE TO THE TOP OF THE SIDE SLOPE SHALL BE TEMPORARILY STABILIZED DURING CONSTRUCTION TO REDUCE THE POTENTIAL FOR EROSION. ALL AREAS DISTURBED DUE TO CONSTRUCTION ACTIVITIES SHALL BE RESTORED TO PROPOSED CONDITIONS AND FULLY STABILIZED PRIOR TO ACCEPTING FLOWS.

DEWATERING

WHEN DEWATERING THE CONSTRUCTION AREA IS NECESSARY, ALL WATERS SHALL BE FILTERED BY USING FILTER BAGS OR AN ALTERNATIVE MEASURE APPROVED BY THE KANE-DUPAGE SOIL & WATER CONSERVATION DISTRICT. ALL FILTER BAGS MUST HAVE SECONDARY CONTAINMENT DEVICES, AND SHOULD BE PLACED ON LEVEL GROUND. WATER MUST HAVE SEDIMENT REMOVED BEFORE BEING ALLOWED TO RETURN TO THE ORIGINAL CREEK. THE DISCHARGE SHALL BE DESIGNED SO THAT RETURNING WATERS DO NOT CAUSE EROSION. THE CONTRACTOR WILL COORDINATE THE METHOD, DESIGN AND LOCATION OF THE DEWATERING PLAN AND FILTER BAG(S) WITH KANE-DUPAGE SOIL & WATER CONSERVATION DISTRICT AT THE PRE-CONSTRCUTION MEETING.

DEWATERING - BASIS OF PAYMENT

DEWATERING AND FILTERING BAG SYSTEMS REQUIRED FOR ALL CONSTRUCTION OPERATIONS WILL NOT BE MEASURED SEPERATELY FOR PAYMENT BUT SHALL BE INCLUDED IN THE COST OF THE RELATED WORK ITEM REQUIRING DEWATERING. DEWATERING WILL INCLUDE MEANS, METHODS AND ALL MATERIALS TO DEWATER AND TO PROVIDE FILTRATION OF WATERS BEFORE RE-ENTERING THE CREEK.

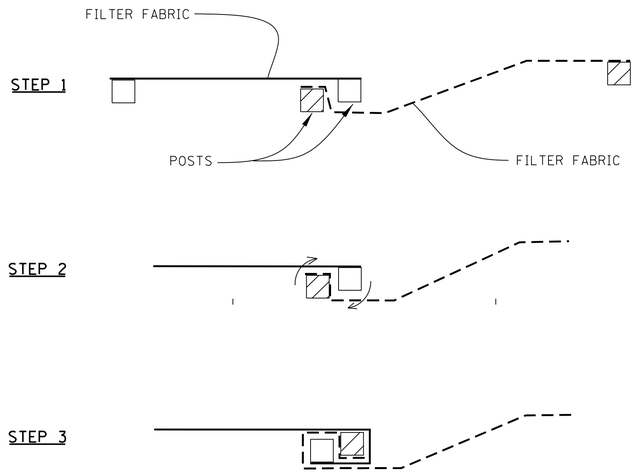

ATTACHING TWO SILT FENCES

NOTES:

1. PLACE THE END POST OF THE SECOND FENCE INSIDE THE END POST OF THE FIRST FENCE.
2. ROTATE BOTH POSTS AT LEAST 180 DEGREES IN A CLOCKWISE DIRECTION TO CREATE A TIGHT SEAL WITH THE FABRIC MATERIAL.
3. CUT THE FABRIC NEAR THE BOTTOM OF THE STAKES TO ACCOMMODATE THE 6" FLAP.
4. DRIVE BOTH POSTS A MINIMUM OF 18 INCHES INTO THE GROUND AND BURY THE FLAP.
5. COMPACT BACKFILL (PARTICULARLY AT SPLICES) COMPLETELY TO PREVENT STORMWATER PIPING.

PERIMETER EROSION BARRIER (SILT FENCE) – SPLICING TWO FENCES

STD. IUM-620B
(SILT FENCE - SPLICING TWO FENCES)

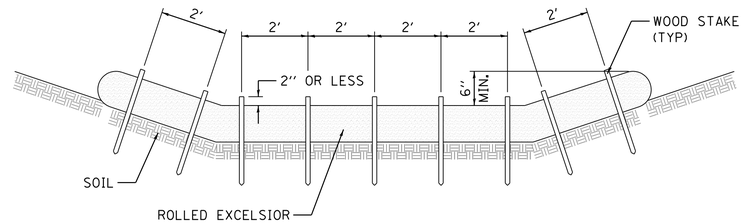

STAKING PATTERN GUIDE

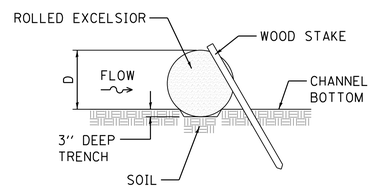

STAKE DETAIL

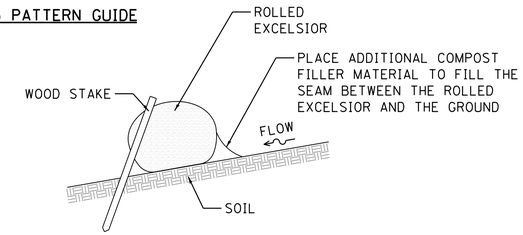

COMPOST FILTER SOCK DETAIL

NOTES:

1. ENDS OF ROLLED EXCELSIOR SHALL BE TURNED AT LEAST 6" UPSLOPE.
2. RECOMMENDED STAKES ARE 1 1/8" WIDE x 1 1/8" THICK x 30" LONG.
3. STAKES SHALL NOT EXTEND ABOVE THE ROLLED EXCELSIOR MORE THAN 2".
4. SPACING: THE TOE OF THE UPSTREAM DITCH CHECK SHALL CREATE A HORIZONTAL LINE WITH THE TOP OF THE DOWNSTREAM DITCH CHECK.
5. WHEN COMPOST FILTER SOCK DITCH CHECK IS USED, PLACE A COMPOST BERM UPSTREAM OF THE FILTER SOCK (SEE IUM 805). A TRENCH IS NOT REQUIRED.
6. OVERLAP MINIMUM IS THE DIAMETER OF THE ROLL.
7. STAKES SHALL BE PLACED EVERY 2' FOR ROLLED EXCELSIOR, OR AS SPECIFIED BY THE MANUFACTURER.

TEMPORARY DITCH CHECK ROLLED EXCELSIOR

STD. IUM-514
(ROLLED EROSION CONTROL PRODUCTS)

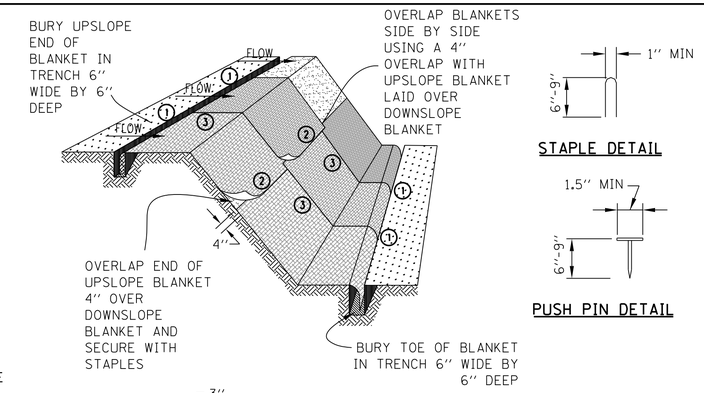

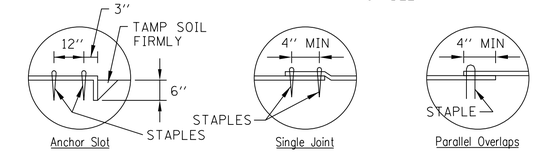

DETAIL 1 DETAIL 2 DETAIL 3

NOTES:

1. STAPLES SHALL BE PLACED IN A DIAMOND PATTERN AT 2 PER S.Y. FOR STITCHED BLANKETS. NON-STICHED SHALL USE 4 STAPLES PER S.Y. OF MATERIAL. THIS EQUATES TO 200 STAPLES WITH STITCHED BLANKET AND 400 STAPLES WITH NON-STICHED BLANKET PER 100 S.Y. OF MATERIAL
2. STAPLE OR PUSH PIN LENGTHS SHALL BE SELECTED BASED ON SOIL TYPE AND CONDITIONS. (MINIMUM STAPLE LENGTH IS 6")
3. EROSION CONTROL MATERIAL SHALL BE PLACED IN CONTACT WITH THE SOIL OVER A PREPARED SEEDBED.
4. ALL ANCHOR SLOTS SHALL BE STAPLED AT APPROXIMATELY 12" INTERVALS.

EROSION CONTROL BLANKET INSTALLATION DETAILS

STD. IL-530A, IL-530B, IUM-531
(EROSION CONTROL BLANKET)

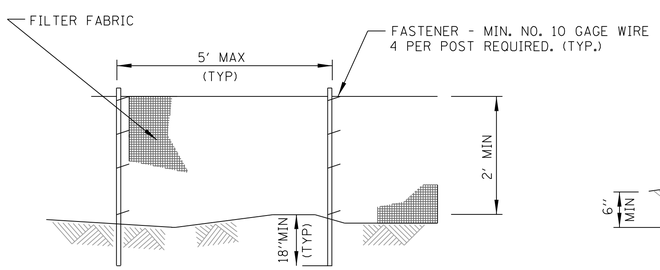

ELEVATION

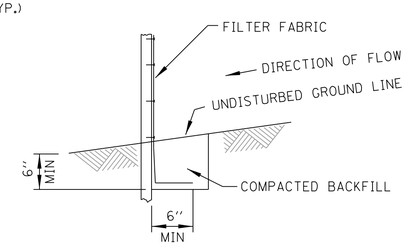

FABRIC ANCHOR DETAIL

NOTES:

1. TEMPORARY SEDIMENT FENCE SHALL BE INSTALLED PRIOR TO ANY GRADING WORK IN THE AREA TO BE PROTECTED. THEY SHALL BE MAINTAINED THROUGHOUT THE CONSTRUCTION PERIOD AND REMOVED IN CONJUNCTION WITH THE FINAL GRADING AND SITE STABILIZATION.
2. FILTER FABRIC SHALL MEET THE REQUIREMENTS OF MATERIAL SPECIFICATION 592 GEOTEXTILE TABLE 1 OR 2, CLASS WITH EQUIVALENT OPENING SIZE OF AT LEAST 30 FOR NONWOVEN AND 40 FOR WOVEN.
3. FENCE POSTS SHALL BE EITHER STANDARD STEEL POST OR WOOD POST WITH A MINIMUM CROSS-SECTIONAL AREA OF 3.0 SQ. IN.

PERIMETER EROSION BARRIER (SILT FENCE)

STD. IUM-620A
(SILT FENCE PLAN)

FILE NAME = W:\Projects\2013\130174 WalkerPhil\cadd\Civil\Dgn\Sht\ERO.04.dgn

WILLS BURKE KELSEY ASSOCIATES LTD.
116 West Main Street, Suite 201
St. Charles, Illinois 60174

USER NAME = nparris	DESIGNED -	REVISED -
	DRAWN -	REVISED -
PLOT SCALE = 1:10	CHECKED -	REVISED -
PLOT DATE = 9/8/2014	DATE -	REVISED -

STATE OF ILLINOIS
DEPARTMENT OF TRANSPORTATION

EROSION & SEDIMENT CONTROL DETAILS

SCALE: | SHEET NO. 4 OF 5 SHEETS | STA. 3+20.00 TO STA. 12+00.00

C.H. RTE.	SECTION	COUNTY	TOTAL SHEETS	SHEET NO.
46	08-00133-01-BR	KANE	87	27
		CONTRACT NO.XXXXXX		
	ILLINOIS	FED. AID PROJECT		

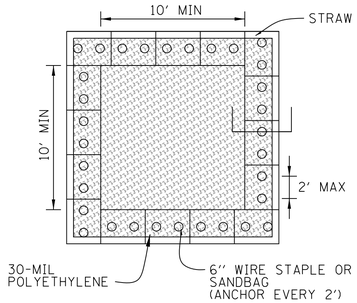

PLAN VIEW

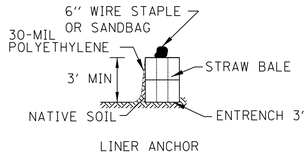

STRAW BALE ANCHOR SECTIONS

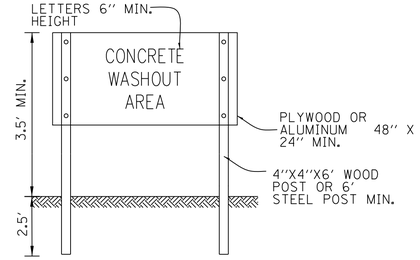

SIGN DETAIL

WASHOUT NOTES:

1. MAINTAINING TEMPORARY CONCRETE WASHOUT FACILITIES SHALL INCLUDE REMOVING AND DISPOSING OF HARDENED CONCRETE AND/OR SLURRY AND RETURNING THE FACILITIES TO A FUNCTIONAL CONDITION.
2. FACILITY SHALL BE CLEANED OR RECONSTRUCTED IN A NEW AREA ONCE WASHOUT BECOMES TWO-THIRDS FULL.
3. EACH STRAW BALE IS TO BE STAKED IN PLACE USING (2) 2"X2"X4' WOODEN STAKES.

TEMPORARY CONCRETE WASHOUT FACILITY – STRAW BALE

STD. IUM-654SB
(TEMPORARY CONCRETE WASHOUT)

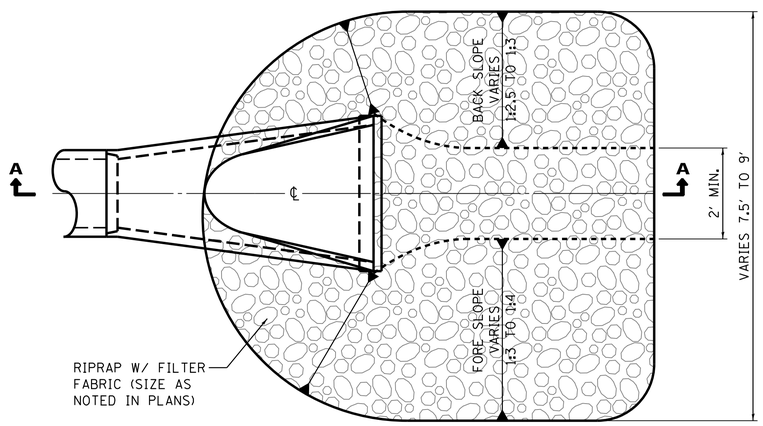

PLAN VIEW

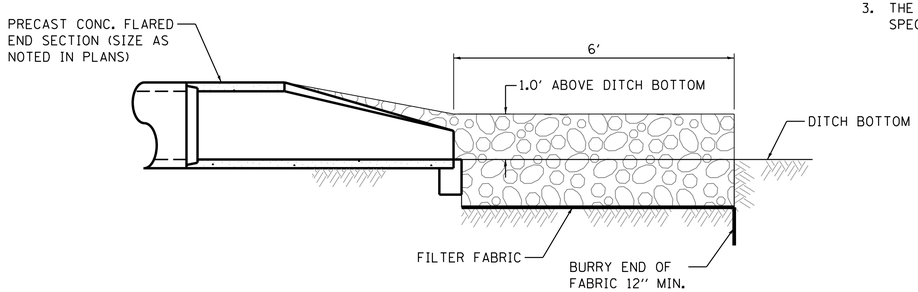

SECTION A-A

PIPE OUTLET DETAIL

PIPE OUTLET NOTES:

1. THE FILTER FABRIC SHALL MEET THE REQUIREMENTS OF ARTICLE 1080.03 OF THE STANDARD SPECIFICATIONS AND SHALL BE PLACED OVER THE CLEARED SUBGRADE AREA PRIOR TO PLACING OF THE RIPRAP.
2. THE ROCK RIPRAP SHALL MEET THE REQUIREMENTS OF SECTION 1005 OF THE STANDARD SPECIFICATIONS FOR GRADATION RR3.
3. THE RIPRAP SHALL BE PLACED ACCORDING TO THE CONSTRUCTION SPECIFICATION OF SECTION 281 THE STANDARD SPECIFICATIONS.

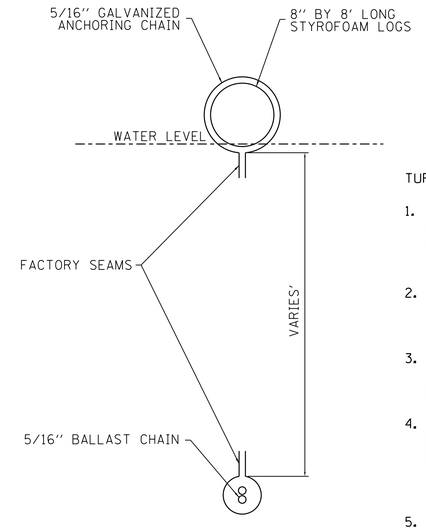

SECTION TURBIDITY BARRIER (FLOATING SILT CURTAIN)

N.T.S

STD. IUM-617A, IUM-617B
(SILT CURTIAN - FLOATING)

TURBIDITY BARRIER NOTES:

1. THE SILT CURTAIN SHALL BE INSTALLED IN SUCH A MANNER AS TO PREVENT DRIFT SHOREWARD OR DOWNSTREAM. THE FLOATATION LOG SHALL BE SECURELY ATTACHED TO THE FABRIC IN BOTH THE HORIZONTAL AND VERTICAL DIRECTION.
2. THE 5/16-INCH CABLE SHALL BE ATTACHED ABOVE THE FLOATATION MEMBERS AND EXTEND THE ENTIRE LENGTH OF EACH SECTION OF SILT CURTAIN. A 5/16-INCH CHAIN SHALL BE SEALED ON THE LOWER HEM FOR BALLAST.
3. CONNECTORS SHALL JOIN THE MAIN LOAD LINE AND BALLAST CHAIN TO CARRY ALL TENSILE PRESSURE. THE FABRIC SHALL BE JOINTED FOR ITS ENTIRE HEIGHT.
4. ANCHORAGE'S SHALL BE INSTALLED ON BOTH SHORE AND STREAM SIDE TO MAXIMUM STABILITY. SHORE ANCHORS SHALL CONSIST OF A POST WITH DEADMAN OR APPROVED EQUAL. STREAM ANCHORS SHALL BE OF SUFFICIENT SIZE, TYPE AN STRENGTH TO STABILIZE THE BARRIER BEYOND THE CONSTRUCTION AREA.
5. ANCHORS SHALL BE BUOYED TO PREVENT THE SILT CURTAIN FROM BEING PULLED UNDER WATER. DANFORTH-TYPE ANCHORS SHALL BE USED IN SANDY BOTTOM AND HEAVY EDGE TYPE OR MUSHROOM ANCHORS ON MUD BOTTOMS.
6. THE CONTRACTOR SHALL BE RESPONSIBLE FOR MAINTENANCE OF THE SILT CURTAIN THROUGHOUT CONSTRUCTION OPERATIONS.
7. UPON COMPLETION OF THE WORK, THE CONTRACTOR SHALL REMOVE THE SILT CURTAIN IN A MANNER THAT WILL PREVENT SILTATION OF THE RIVER/CREEK.
8. THE TURBIDITY CURTAIN/SILT CURTAIN SHOULD BE PLACED IN THE CREEK PRIOR TO ANY DEMOLITION TO THE BRIDGE DECK AND/OR PIERS.

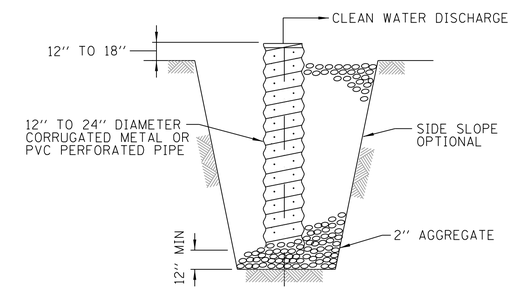

SECTION

SUMP PIT NOTES:

1. PIT DIMENSIONS ARE OPTIONAL.
2. THE STANDPIPE WILL BE CONSTRUCTED BY PERFORATING A 12"-24" DIAMETER CORRUGATED METAL OR PVC PIPE.
3. A BASE OF 2" AGGREGATED WILL BE PLACED IN THE PIT TO A MINIMUM DEPTH OF 12". AFTER INSTALLING THE STANDPIPE, THE PIT SURROUNDING THE STANDPIPE WILL THEN BE BACKFILLED WITH 2" AGGREGATE.
4. THE STANDPIPE WILL EXTEND 12" TO 18" ABOVE THE LIP OF THE PIT.
5. IF DISCHARGE WILL BE PUMPED DIRECTLY TO A STORM DRAINAGE SYSTEM, THE STANDPIPE WILL BE WRAPPED WITH FILTER FABRIC BEFORE INSTALLATION.
6. IF DESIRED, ¼"-½" HARDWARE CLOTH MAY BE PLACED AROUND THE STANDPIPE PRIOR TO ATTACHING THE FILTER FABRIC. THIS WILL INCREASE THE RATE OF WATER SEEPAGE INTO THE PIPE.

SUMP PIT PLAN

STD. IL-650
(SUMP PIT PLAN)

FILE NAME = W:\Projects\2013\130174 WalkerPhil\cadd\Civil\Dgn\Sht\ERO_05.dgn

WILLS BURKE KELSEY ASSOCIATES LTD.
116 West Main Street, Suite 201
St. Charles, Illinois 60174

USER NAME = nparris	DESIGNED -	REVISED -	
	DRAWN -	REVISED -	
PLOT SCALE = 1:10	CHECKED -	REVISED -	
PLOT DATE = 9/8/2014	DATE -	REVISED -	

STATE OF ILLINOIS
DEPARTMENT OF TRANSPORTATION

EROSION & SEDIMENT CONTROL DETAILS

SCALE: | SHEET NO. 5 OF 5 SHEETS | STA. 3+20.00 TO STA. 12+00.00

C.H. RTE.	SECTION	COUNTY	TOTAL SHEETS	SHEET NO.
46	08-00133-01-BR	KANE	87	28
		CONTRACT NO.XXXXXX		
	ILLINOIS	FED. AID PROJECT		

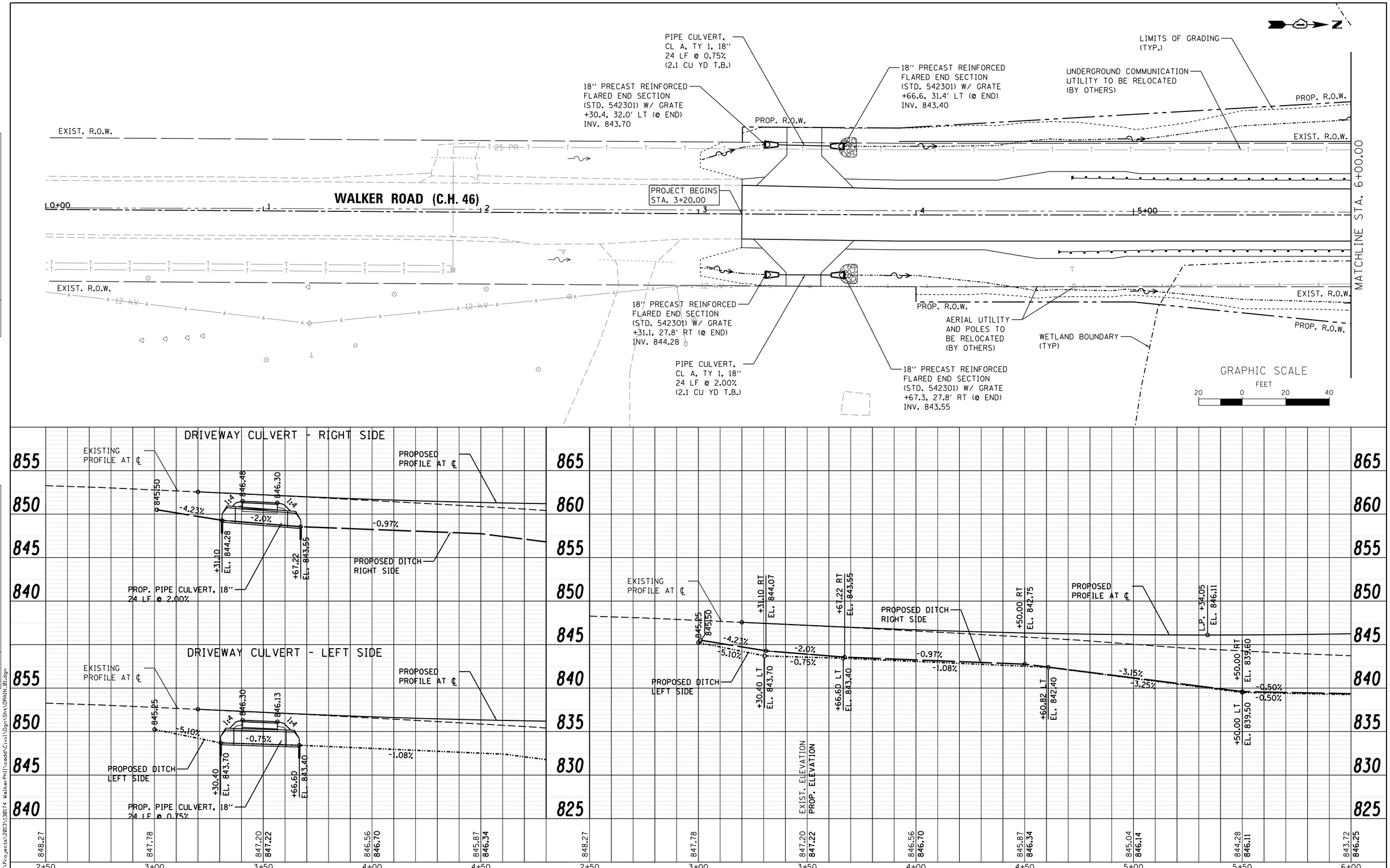

PLAN	BY	DATE
SURVEYED		
PLOTTED		
ALIGNMENT CHECKED		
RT. OF WAY CHECKED		
CADD FILE NAME		
NOTE BOOK NO.		

PROFILE	BY	DATE
SURVEYED		
PLOTTED		
GRADES CHECKED		
BM. NOTED		
STRUCTURE NOTATNS CHKD		
NOTE BOOK NO.		

FILE NAME = W:\Projects\2013\130174 WalkerPhil\cadd\Civil\Dgn\Sht\DRAIN_01.dgn

WILLS BURKE KELSEY ASSOCIATES LTD.
116 West Main Street, Suite 201
St. Charles, Illinois 60174

USER NAME = nparris	DESIGNED -	REVISED -
	DRAWN -	REVISED -
PLOT SCALE = 1:20	CHECKED -	REVISED -
PLOT DATE = 9/8/2014	DATE -	REVISED -

STATE OF ILLINOIS
DEPARTMENT OF TRANSPORTATION

DRAINAGE & UTILITY
PLAN & PROFILE

SCALE: 1"=20' | SHEET NO. 1 OF 3 SHEETS | STA. 3+20.00 TO STA. 6+00.00

C.H. RTE.	SECTION	COUNTY	TOTAL SHEETS	SHEET NO.
46	08-00133-01-BR	KANE	87	29

CONTRACT NO.XXXXXX

ILLINOIS FED. AID PROJECT

CONC. HDWL. FOR PIPE DRAINS NOTE:

CONCRETE HEADWALL FOR PIPE DRAINS FOR THE ABUTMENTS DRAINS WILL NOT BE MEASURED FOR PAYMENT BUT SHALL BE INLCUDED IN THE COST OF THE PIPE UNDERDRAINS FOR STRUCTURES 4".

THE INVERT ELEVATION SHALL BE ADJUSTED AS NEEDED TO ENSURE THAT THE PIPE DRAIN EXTENDS UNDER THE WINGWALL.

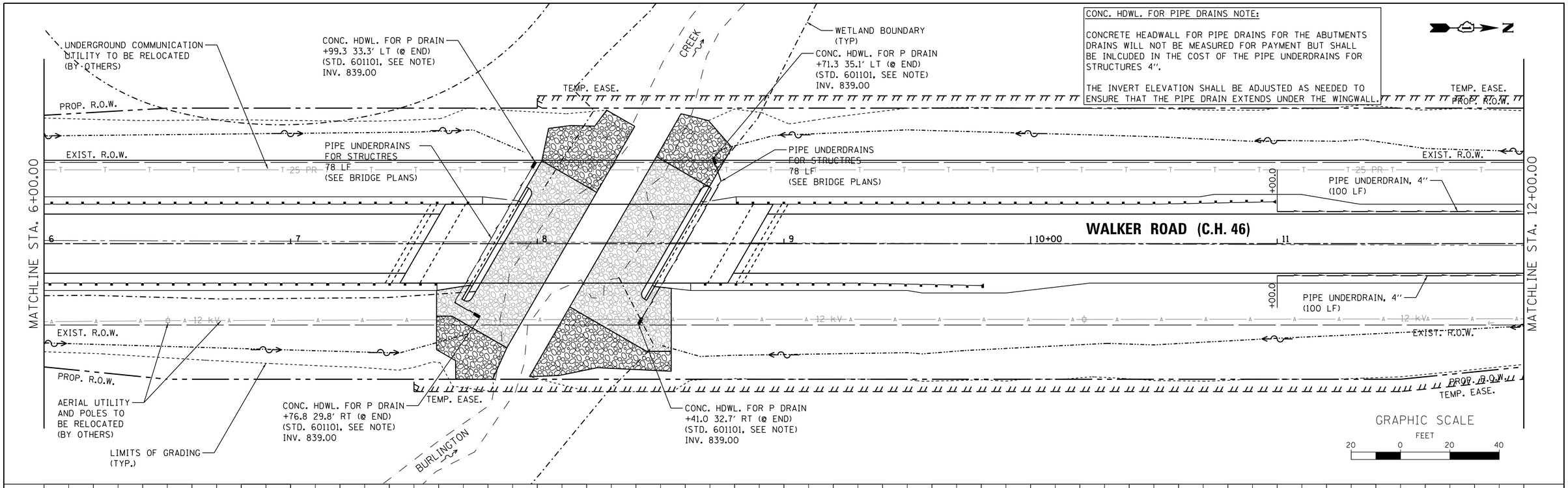

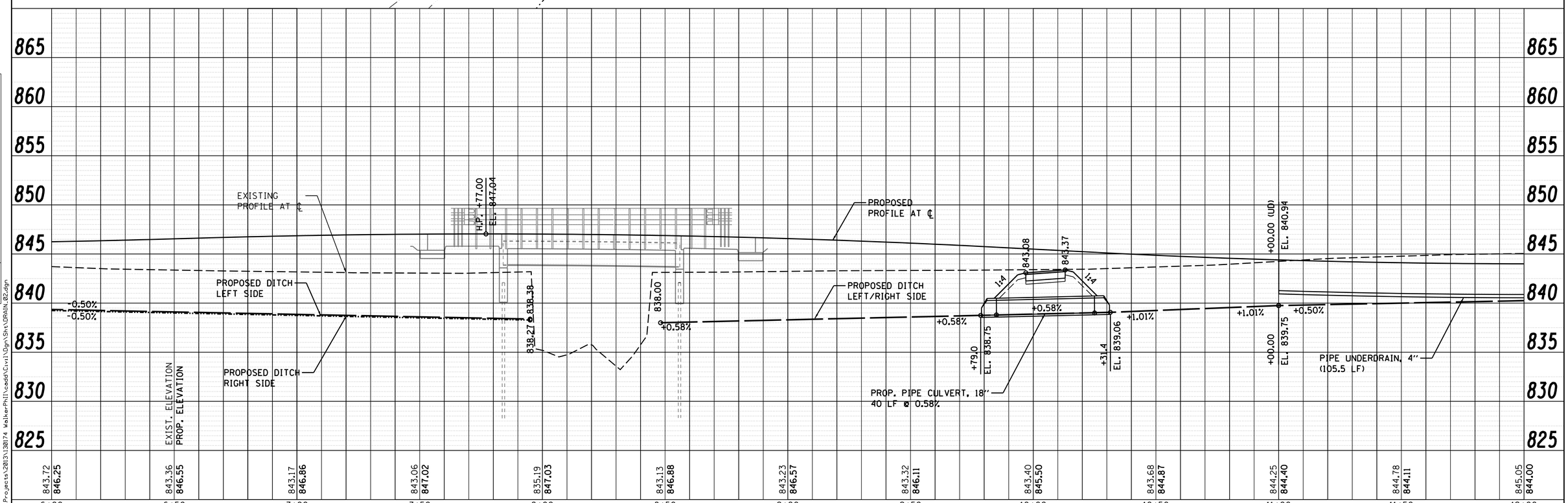

PLAN	BY	DATE
SURVEYED		
PLOTTED		
ALIGNMENT CHECKED		
RT. OF WAY CHECKED		
CADD FILE NAME		
NOTE BOOK NO.		

PROFILE	BY	DATE
SURVEYED		
PLOTTED		
GRADES CHECKED		
BKM. NOTED		
STRUCTURE NOTATNS CHKD		
NOTE BOOK NO.		

FILE NAME = W:\Projects\2013\130174 WalkerPhII\cadd\Civil\Dgn\Sht\DRAIN_02.dgn

WILLS BURKE KELSEY ASSOCIATES LTD.
116 West Main Street, Suite 201
St. Charles, Illinois 60174

USER NAME = nparris	DESIGNED -	REVISED -	
	DRAWN -	REVISED -	
PLOT SCALE = 1:20	CHECKED -	REVISED -	
PLOT DATE = 9/8/2014	DATE -	REVISED -	

STATE OF ILLINOIS
DEPARTMENT OF TRANSPORTATION

DRAINAGE & UTILITY
PLAN & PROFILE

SCALE: 1"=20' | SHEET NO. 2 OF 3 SHEETS | STA. 6+00.00 TO STA. 12+00.00

C.H. RTE.	SECTION	COUNTY	TOTAL SHEETS	SHEET NO.
46	08-00133-01-BR	KANE	87	30
		CONTRACT NO.XXXXXX		
	ILLINOIS	FED. AID PROJECT		

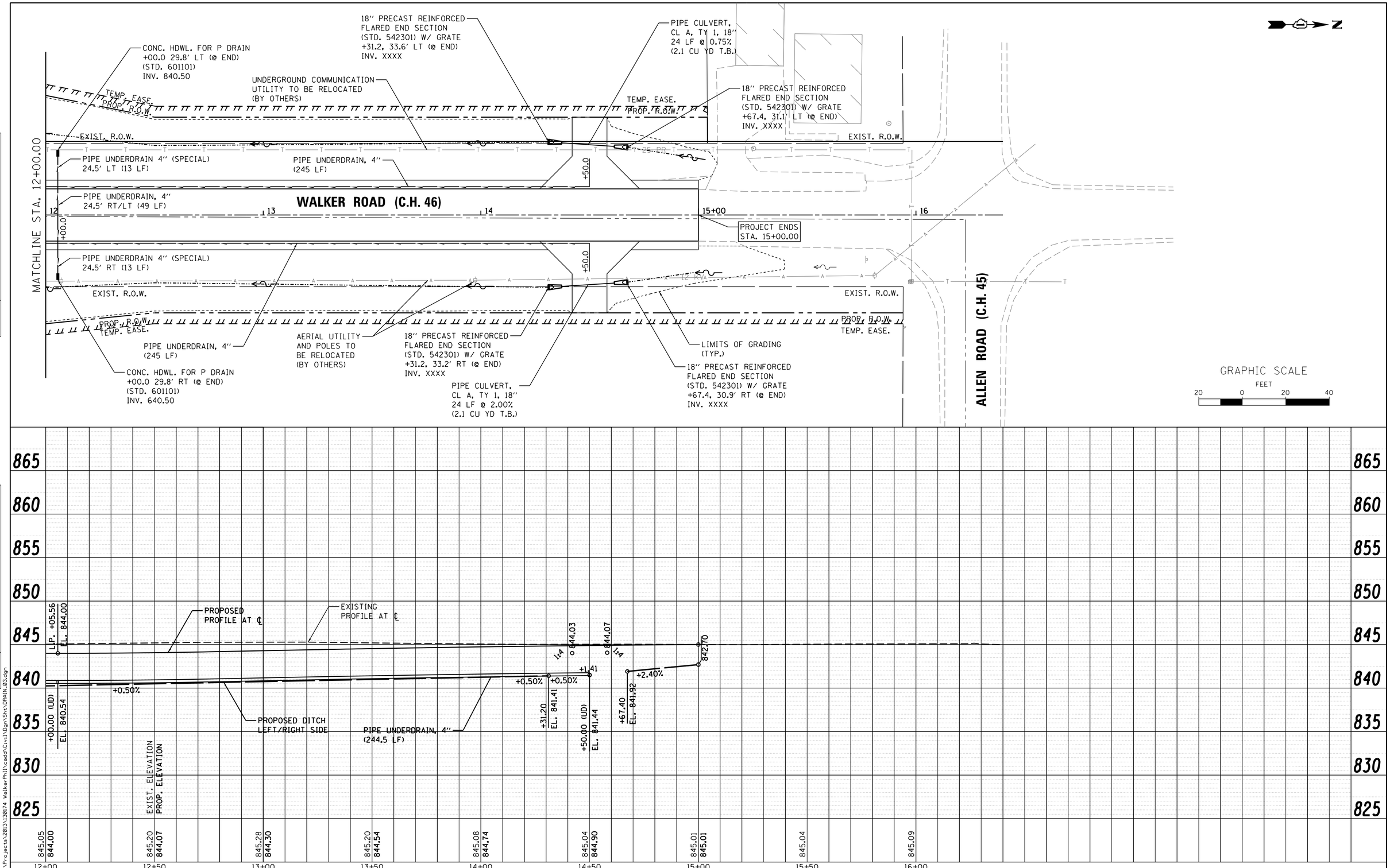

PLAN — SURVEYED / PLOTTED / ALIGNMENT CHECKED / RT. OF WAY CHECKED / CADD FILE NAME / NOTE BOOK NO. / BY / DATE

PROFILE — SURVEYED / PLOTTED / GRADES CHECKED / BM. NOTED / STRUCTURE NOTATNS CHKD / NOTE BOOK NO. / BY / DATE

FILE NAME = W:\Projects\2013\130174 WalkerPhil\cadd\Civil\Dgn\Sht\DRAIN_03.dgn

WILLS BURKE KELSEY ASSOCIATES LTD.
116 West Main Street, Suite 201
St. Charles, Illinois 60174

USER NAME = nparris	DESIGNED -	REVISED -
	DRAWN -	REVISED -
PLOT SCALE = 1:20	CHECKED -	REVISED -
PLOT DATE = 9/8/2014	DATE -	REVISED -

STATE OF ILLINOIS
DEPARTMENT OF TRANSPORTATION

DRAINAGE & UTILITY PLAN & PROFILE

SCALE: 1"=20' | SHEET NO. 3 OF 3 SHEETS | STA. 12+00.00 TO STA. 15+00.00

C.H. RTE.	SECTION	COUNTY	TOTAL SHEETS	SHEET NO.
46	08-00133-01-BR	KANE	87	31
		CONTRACT NO.XXXXXX		
		ILLINOIS FED. AID PROJECT		

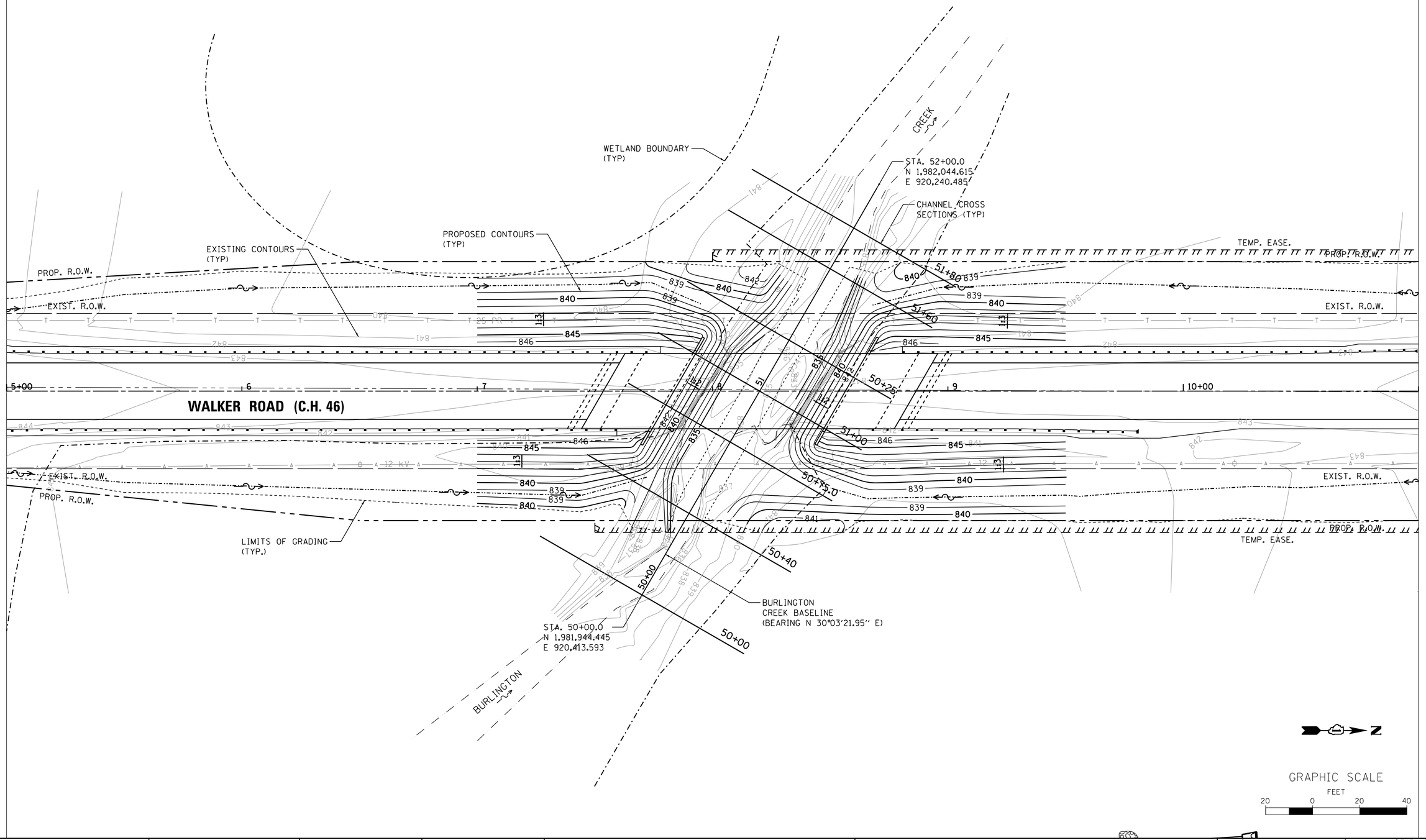

FILE NAME = W:\Projects\2013\130174 WalkerPhil\cadd\Civil\Dgn\Sht\GRADE.01.dgn

WILLS BURKE KELSEY ASSOCIATES LTD.
116 West Main Street, Suite 201
St. Charles, Illinois 60174

USER NAME = nparris	DESIGNED -	REVISED -
	DRAWN -	REVISED -
PLOT SCALE = 1:20	CHECKED -	REVISED -
PLOT DATE = 9/8/2014	DATE -	REVISED -

STATE OF ILLINOIS
DEPARTMENT OF TRANSPORTATION

CHANNEL GRADING PLAN

SCALE: 1"=20' | SHEET NO. 1 OF 1 SHEETS | STA. 5+00.00 TO STA. 11+00.00

C.H. RTE.	SECTION	COUNTY	TOTAL SHEETS	SHEET NO.
46	08-00133-01-BR	KANE	87	32

CONTRACT NO.XXXXXX

ILLINOIS FED. AID PROJECT

FAU ROUTE	SECTION	COUNTY	TOTAL SHEETS	SHEET NO.
CH 46	08-00133-01-BR	KANE	3	1

KANE COUNTY DIVISION OF TRANSPORTATION
PLAT OF HIGHWAYS
FOR PROPOSED FEDERAL AID HIGHWAY

ROUTE: CH 46 (WALKER ROAD OVER BURLINGTON CREEK)
PROJECT NO.: BROS-0089(155)
SECTION: 08-00133-01-BR
JOB NO.: P-91-272-09
COUNTY: KANE
LIMITS: 3+20 TO 15+94.27

N

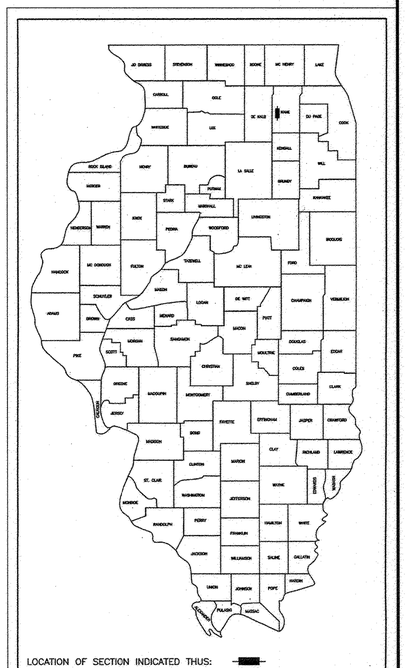

BASIS OF BEARINGS: NAD83, ILLINOIS EAST ZONE (1201) AT GROUND

J.U.L.I.E.
JOINT UTILITY LOCATING INFORMATION FOR EXCAVATION
1-800-892-0123

GRAPHIC SCALE

50 0 25 50 100 200

(IN FEET)
1 inch = 50 ft.

FULL SIZE PLANS HAVE BEEN PREPARED USING STANDARD ENGINEERING SCALES, REDUCED SIZED PLANS WILL NOT CONFORM TO STANDARD SCALES. IN MAKING MEASUREMENTS ON REDUCED PLANS, THE ABOVE SCALES MAY BE USED.

HAMPSHIRE TOWNSHIP SECTIONS 19, T42N, R6E AND 20, T42N, R6E

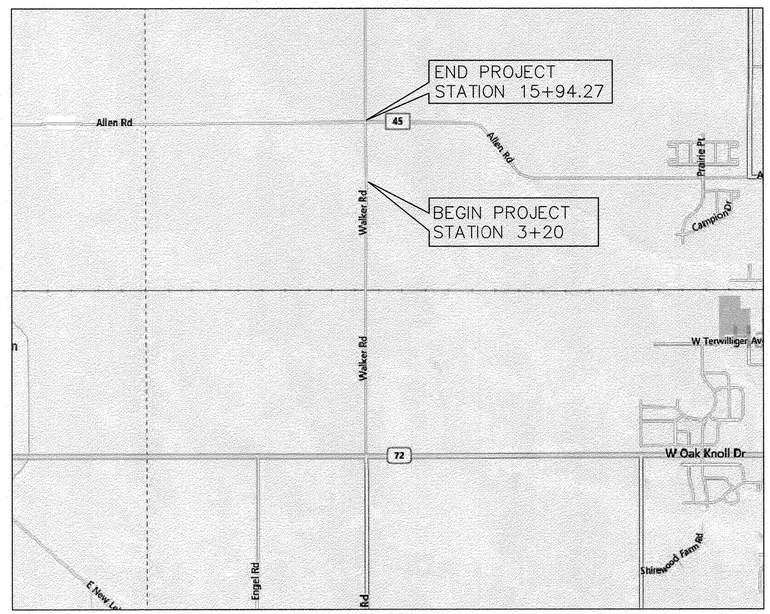

LOCATION MAP
(NOT TO SCALE)

PROJECT LENGTH = 1274.27 LINEAL FEET = 0.241 MILES (WALKER ROAD)

AGENCY RESPONSIBLE FOR LETTING

APPROVED _____ 20 _____

KANE COUNTY ENGINEER

PASSED _____ 20 _____

DISTRICT 1 ENGINEER OF LOCAL ROADS & STREETS

RELEASED FOR BID BASED ON LIMITED REVIEW _____ 20 _____

DEPUTY DIRECTOR OF HIGHWAYS, REGION 1 ENGINEER

COMPASS SURVEYING LTD

2631 GINGER WOODS PARKWAY, STE. 100
AURORA, IL 60502
PHONE: (630) 820-9100 FAX: (630) 820-7030

JOB NO. 9765PH

DANIEL W. WALTER 35-3585 AURORA, ILLINOIS STATE OF ILLINOIS

11/6/13

ILLINOIS PROFESSIONAL LAND SURVEYOR NO. 3585
LICENSE EXPIRATION DATE: NOVEMBER 30, 2014
COMPASS LAND SURVEYING LTD.
PROFESSIONAL DESIGN FIRM
LAND SURVEYOR CORPORATION NO. 184-002778
LICENSE EXPIRES 4/30/2015

REVISION	
DATE	DESCRIPTION

KANE COUNTY DIVISION OF TRANSPORTATION
PLAT OF HIGHWAYS
CH 46 (WALKER ROAD OVER BURLINGTON CREEK)

SECTION 08-00133-01-BR
COUNTY KANE
JOB# P-91-272-09 PROJECT# BROS-0089(155)
STA 3+20 TO STA 15+94.27
DRAWN MRA CHECKED DW
SCALE: 1" = 50' SHEET NO. 1 OF 3

R.O.W. PLAT	BY	DATE
MADE		
CHECKED		
INKED		
NOTEBOOK NO.		

ROUTE: CH 46 SECTION: 08-00133-01-BR COUNTY: KANE JOB: P-91-272-09 RECORDING: RECORDED ON / / AS DOCUMENT NO. G:\Psdata\9000\9765\IDOT\9765 PO Hwy IDOT 1of3.dwg

FILE NAME = W:\Projects\2013\30174 Walker Phil\cadd\Civil\Dgn\Sht\PLAT_01.dgn

WILLS BURKE KELSEY ASSOCIATES LTD.
116 West Main Street, Suite 201
St. Charles, Illinois 60174

USER NAME = nparris	DESIGNED -	REVISED -
	DRAWN -	REVISED -
PLOT SCALE = 1:10	CHECKED -	REVISED -
PLOT DATE = 9/8/2014	DATE -	REVISED -

STATE OF ILLINOIS
DEPARTMENT OF TRANSPORTATION

PLAT OF HIGHWAYS
FOR REFERENCE ONLY

SCALE: SHEET NO. 1 OF 3 SHEETS STA. TO STA.

C.H. RTE.	SECTION	COUNTY	TOTAL SHEETS	SHEET NO.
46	08-00133-01-BR	KANE	87	33
		CONTRACT NO.XXXXXX		
	ILLINOIS	FED. AID PROJECT		

PART OF THE NORTHEAST QUARTER OF SECTION 19 AND PART OF THE NORTHWEST QUARTER OF SECTION 20, TOWNSHIP 42 NORTH, RANGE 6 EAST OF THE THIRD PRINCIPAL MERIDIAN, IN KANE COUNTY, ILLINOIS

BASIS OF BEARINGS: NAD83, ILLINOIS EAST ZONE (1201) AT GROUND

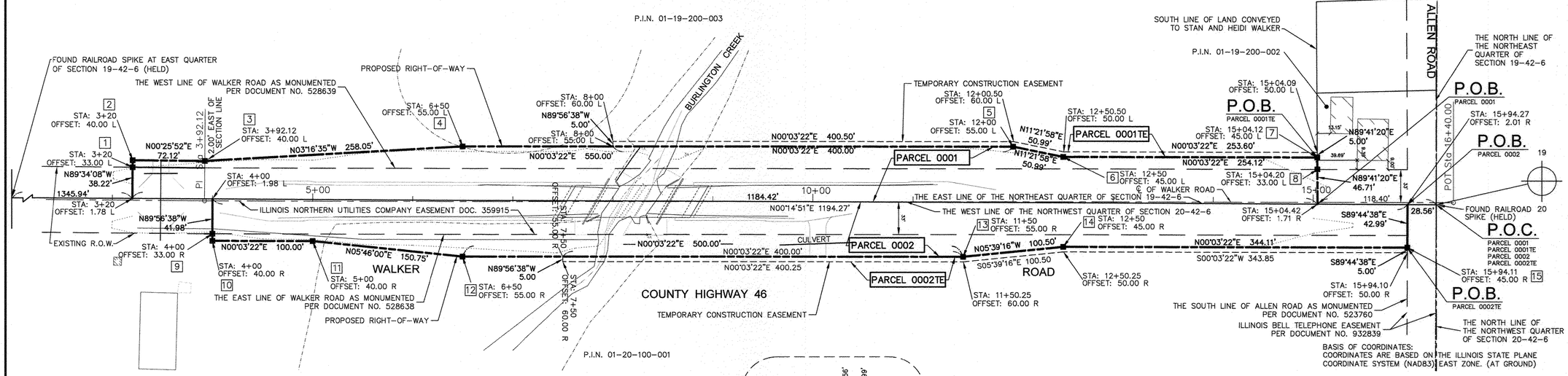

LEGEND

SECTION CORNER (9 10 16 15) — QUARTER SECTION CORNER (16 — 15)

- SECTION LINE
- QUARTER SECTION LINE
- QUARTER QUARTER SECTION LINE
- PLATTED LOT LINES
- PROPERTY (DEED) LINE
- APPARENT PROPERTY LINE
- EXISTING CENTERLINE
- PROPOSED CENTERLINE
- EXISTING RIGHT OF WAY LINE
- PROPOSED RIGHT OF WAY LINE
- PROPOSED EASEMENT
- TEMPORARY EASEMENT
- EDGE OF PAVEMENT
- EDGE OF GRAVEL
- AERIAL WIRES

129.32' MEASURED DIMENSION
129.32' (COMP) COMPUTED DIMENSION
(129.32') RECORD DIMENSION

EXISTING BUILDING

Bearings are referenced to the Illinois Coordinate System, NAD83, East Zone, as provided by the Illinois Department of Transportation.

UTILITY POLE
IRON PIPE OR FOUND ROD — "MAG" NAIL SET
CUT CROSS FOUND OR SET — 5 / 8" REBAR SET

- T1, T2, T3 — THESE STAKES REFERENCED FOUND OR SET MONUMENTATION. SET 5/8 INCH IRON ROD FLUSH WITH GROUND TO TIE FOUND IRON STAKE IDENTIFIED BY COLORED PLASTIC CAP BEARING SURVEYORS REGISTRATION NUMBER.
- BT1, BT2, BT3 — THESE STAKES, IN CULTIVATED AREAS, REFERENCED FOUND OR SET MONUMENTATION. BURIED 5/8 INCH IRON ROD 20 INCHES BELOW GROUND TO TIE FOUND IRON STAKE. IDENTIFIED BY COLORED PLASTIC CAP BEARING SURVEYORS REGISTRATION NUMBER.
- STAKING OF PROPOSED RIGHT OF WAY, DIVISION OF HIGHWAYS SURVEY MARKER TO MONUMENT THE POSITION SHOWN.
- M — STAKING OF PROPOSED RIGHT OF WAY IN CULTIVATED AREAS. BURIED 5/8 INCH METAL ROD 20 INCHES BELOW GROUND TO MARK FUTURE SURVEY MARKER POSITION.
- PERMANENT SURVEY MARKER, I.D.O.T. STANDARD 2135 (TO BE SET BY OTHERS)
- RIGHT OF WAY STAKING PROPOSED TO BE SET

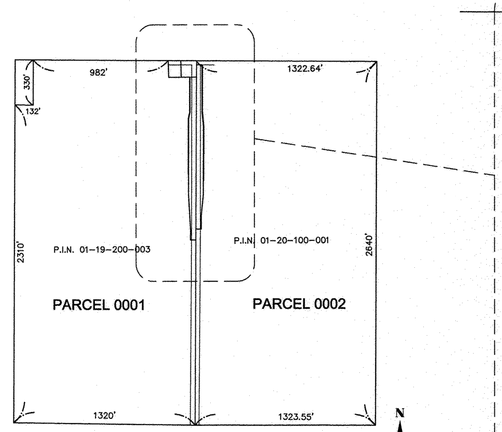

TOTAL HOLDING DETAIL
SCALE: 1" = 500'

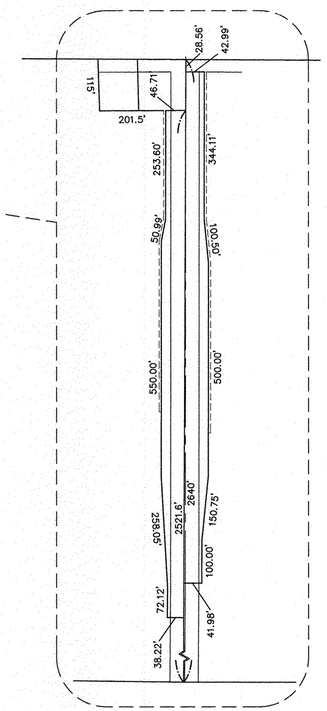

DETAIL
SCALE: NONE

COORDINATE TABLE

POINT NO.	NORTH	EAST	STATION		OFFSET
	1981494.55	920324.30	3+20	L	1.78
1	1981494.78	920293.08	3+20	L	33.00
2	1981494.83	920286.08	3+20	L	40.00
3	1981566.95	920286.62	3+92.12	L	40.00
4	1981824.58	920271.87	6+50	L	55.00
	1981974.58	920272.02	8+00	L	55.00
	1981974.59	920267.02	8+00	L	60.00
5	1982374.58	920272.41	12+00	L	55.00
	1982375.08	920267.41	12+00.50	L	60.00
6	1982424.57	920282.46	12+50	L	45.00
	1982425.07	920277.46	12+50.50	L	50.00
7	1982678.70	920282.71	15+04.12	L	45.00
	1982678.67	920277.71	15+04.09	L	50.00
8	1982678.76	920294.71	15+04.20	L	33.00
	1981574.53	920324.65	4+00	L	1.98
9	1981574.50	920359.63	4+00	R	33.00
10	1981574.49	920366.63	4+00	R	40.00
11	1981674.49	1981674.49	5+00	R	40.00
12	1981824.48	920381.87	6+50	R	55.00
	1981924.48	920381.97	7+50	R	55.00
	1981924.47	920386.97	7+50	R	60.00
13	1982324.48	920382.36	11+50	R	55.00
	1982324.72	920387.36	11+50.25	R	60.00
14	1982424.49	920372.46	12+50	R	45.00
	1982424.73	920377.46	12+50.25	R	50.00
15	1982768.60	920372.80	15+94.11	R	45.00
	1982768.58	920377.80	15+94.10	R	50.00
	1982768.79	920329.81	15+94.27	R	2.01

CERTIFICATION

STATE OF ILLINOIS)
)SS
COUNTY OF KANE)

THIS IS TO CERTIFY THAT I, DANIEL W. WALTER, AN ILLINOIS PROFESSIONAL LAND SURVEYOR, HAVE SURVEYED THE PLAT OF HIGHWAYS SHOWN HEREON IN SECTION 32, TOWNSHIP 41 NORTH, RANGE 8 EAST OF THE THIRD PRINCIPAL MERIDIAN, KANE COUNTY, ILLINOIS, THAT THE SURVEY IS TRUE AND COMPLETE AS SHOWN TO THE BEST OF MY KNOWLEDGE AND BELIEF, THAT THE PLAT CORRECTLY REPRESENTS SAID SURVEY, THAT ALL MONUMENTS FOUND ARE OF PERMANENT QUALITY AND OCCUPY THE POSITIONS SHOWN THEREON AND THAT THE MONUMENTS ARE SUFFICIENT TO ENABLE THE SURVEY TO BE RETRACED. MADE FOR THE DEPARTMENT OF TRANSPORTATION, STATE OF ILLINOIS.

COMPASS LAND SURVEYING LTD.
PROFESSIONAL DESIGN FIRM
LAND SURVEYOR CORPORATION NO. 184-002778
LICENSE EXPIRES 4/30/2015

BY: _____ DATE: 11/6/13
IL PROFESSIONAL
LAND SURVEYOR NO. 3585

LICENSE EXPIRES 11/30/14

PROFESSIONAL LAND SURVEYOR — DANIEL W. WALTER 35-3585 AURORA, ILLINOIS — STATE OF ILLINOIS

COMPASS SURVEYING LTD
2631 GINGER WOODS PARKWAY, STE. 100
AURORA, IL 60502
PHONE: (630) 820-9100 FAX: (630) 820-7030

JOB NO. 9765PH

PARCEL NO.	OWNER	TOTAL HOLDING	AREA TAKEN	AREA IN EXISTING R.O.W.	REMAINDER	EASEMENTS TEMP	EASEMENTS PERM	PURPOSE OF EASEMENT	PERMANENT TAX NUMBER	PROPERTY ACQUIRED BY
0001	WILLIAM L. DUMOULIN REVOCABLE TRUST	78.49	1.355 AC.	0.896	77.135				01-19-200-003	
0001TE	WILLIAM L. DUMOULIN REVOCABLE TRUST					0.081 AC.		CONSTRUCTION	01-19-200-003	
0002	MELANIE J. HOWE TRUST NO. 1	80.00	1.357 AC.	0.904	78.643				19-20-100-001	
0002TE	MELANIE J. HOWE TRUST NO. 1					0.097 AC.		CONSTRUCTION	19-20-100-001	

REVISION DATE	DESCRIPTION

KANE COUNTY DIVISION OF TRANSPORTATION
PLAT OF HIGHWAYS
CH 46 (WALKER ROAD OVER BURLINGTON CREEK)

SECTION 08-00133-01-BR
COUNTY KANE
JOB# P-91-272-09 PROJECT# BROS-0089(155)
STA 3+20 TO STA 15+94.27
DRAWN MRA CHECKED DW
SCALE: 1" = 50' SHEET NO. 2 OF 3

ROUTE: CH 46 SECTION: 08-00133-01-BR COUNTY: KANE JOB: P-91-272-09 RECORDING: RECORDED ON / / AS DOCUMENT NO. G:\Psdata\9000\9765\IDOT\9765 POHwy IDOT 2of3.dwg

R.O.W. PLAT | NOTEBOOK NO. | MADE | CHECKED | INKED | BY | DATE

FILE NAME = W:\Projects\2013\130174 WalkerPhil\cadd\Civil\Dgn\Sht\PLAT-02.dgn

WILLS BURKE KELSEY ASSOCIATES LTD.
116 West Main Street, Suite 201
St. Charles, Illinois 60174

USER NAME = nparris	DESIGNED -	REVISED -
	DRAWN -	REVISED -
PLOT SCALE = 1:10	CHECKED -	REVISED -
PLOT DATE = 9/8/2014	DATE -	REVISED -

STATE OF ILLINOIS
DEPARTMENT OF TRANSPORTATION

PLAT OF HIGHWAYS
FOR REFERENCE ONLY

SCALE: SHEET NO. 2 OF 3 SHEETS STA. TO STA.

C.H. RTE.	SECTION	COUNTY	TOTAL SHEETS	SHEET NO.
46	08-00133-01-BR	KANE	87	34

CONTRACT NO.XXXXXX
ILLINOIS FED. AID PROJECT

PART OF THE NORTHEAST QUARTER OF SECTION 19 AND PART OF THE NORTHWEST QUARTER OF SECTION 20, TOWNSHIP 42 NORTH, RANGE 6 EAST OF THE THIRD PRINCIPAL MERIDIAN, IN KANE COUNTY, ILLINOIS

BASIS OF BEARINGS: NAD83, ILLINOIS EAST ZONE (1201) AT GROUND

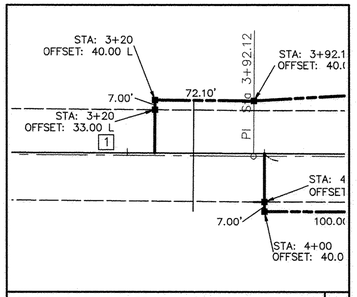

STATION 3+20 33.00 L HIGHWAY MONUMENT 1

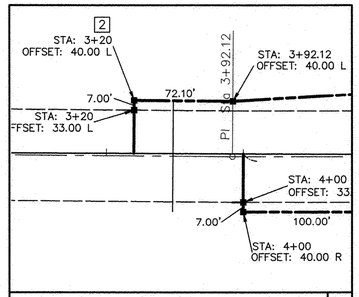

STATION 3+20 40.00 L HIGHWAY MONUMENT 2

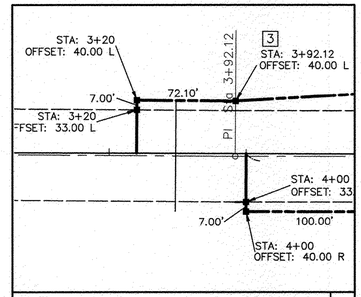

STATION 3+92.12 40.00 L HIGHWAY MONUMENT 3

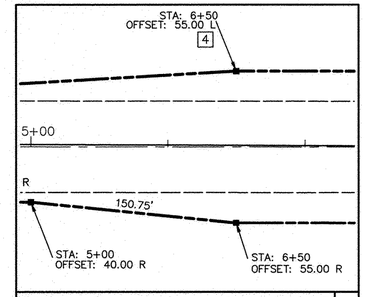

STATION 6+50 55.00 L HIGHWAY MONUMENT 4

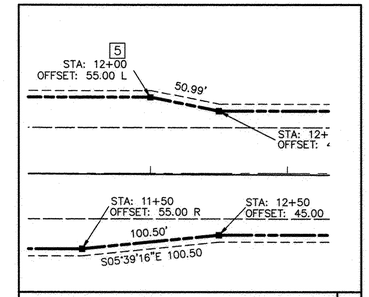

STATION 12+00 55.00 L HIGHWAY MONUMENT 5

CERTIFICATION

STATE OF ILLINOIS)
)SS
COUNTY OF KANE)

THIS IS TO CERTIFY THAT I, DANIEL W. WALTER, AN ILLINOIS PROFESSIONAL LAND SURVEYOR, HAVE SURVEYED THE PLAT OF HIGHWAYS SHOWN HEREON IN SECTION 32, TOWNSHIP 41 NORTH, RANGE 8 EAST OF THE THIRD PRINCIPAL MERIDIAN, KANE COUNTY, ILLINOIS, THAT THE SURVEY IS TRUE AND COMPLETE AS SHOWN TO THE BEST OF MY KNOWLEDGE AND BELIEF, THAT THE PLAT CORRECTLY REPRESENTS SAID SURVEY, THAT ALL MONUMENTS FOUND ARE OF PERMANENT QUALITY AND OCCUPY THE POSITIONS SHOWN THEREON AND THAT THE MONUMENTS ARE SUFFICIENT TO ENABLE THE SURVEY TO BE RETRACED. MADE FOR THE DEPARTMENT OF TRANSPORTATION, STATE OF ILLINOIS.

COMPASS LAND SURVEYING LTD.
PROFESSIONAL DESIGN FIRM
LAND SURVEYOR CORPORATION NO. 184-002778
LICENSE EXPIRES 4/30/2015

BY: DATE: 11/6/13
IL PROFESSIONAL
LAND SURVEYOR NO. 3585

LICENSE EXPIRES 11/30/14

PROFESSIONAL LAND SURVEYOR DANIEL W. WALTER 35-3585 AURORA, ILLINOIS STATE OF ILLINOIS

LEGEND

9 10 / 16 15 SECTION CORNER — 16 — 15 SECTION CORNER

- SECTION LINE
- QUARTER SECTION LINE
- QUARTER QUARTER SECTION LINE
- PLATTED LOT LINES
- R — PROPERTY (DEED) LINE
- APL — APPARENT PROPERTY LINE
- EXISTING CENTERLINE
- PROPOSED CENTERLINE
- EXISTING RIGHT OF WAY LINE
- PROPOSED RIGHT OF WAY LINE
- PROPOSED EASEMENT
- EDGE OF PAVEMENT
- EDGE OF GRAVEL
- A — A — AERIAL WIRES
- 129.32' MEASURED DIMENSION
- 129.32' (COMP) COMPUTED DIMENSION
- (129.32') RECORD DIMENSION
- EXISTING BUILDING

Bearings are referenced to the Illinois Coordinate System, NAD83, East Zone, as provided by the Illinois Department of Transportation.

- UTILITY POLE
- ○ IRON PIPE OR FOUND ROD
- + CUT CROSS FOUND OR SET
- ⊕ "MAG" NAIL SET
- ● 5 / 8" REBAR SET
- ● T1, T2, T3 — THESE STAKES REFERENCED FOUND OR SET MONUMENTATION. SET 5/8 INCH IRON ROD FLUSH WITH GROUND TO TIE FOUND IRON STAKE IDENTIFIED BY COLORED PLASTIC CAP BEARING SURVEYORS REGISTRATION NUMBER.
- • BT1, BT2, BT3 — THESE STAKES, IN CULTIVATED AREAS, REFERENCED FOUND OR SET MONUMENTATION. BURIED 5/8 INCH IRON ROD 20 INCHES BELOW GROUND TO TIE FOUND IRON STAKE. IDENTIFIED BY COLORED PLASTIC CAP BEARING SURVEYORS REGISTRATION NUMBER.
- ■ STAKING OF PROPOSED RIGHT OF WAY, DIVISION OF HIGHWAYS SURVEY MARKER TO MONUMENT THE POSITION SHOWN.
- ■ M STAKING OF PROPOSED RIGHT OF WAY IN CULTIVATED AREAS. BURIED 5/8 INCH METAL ROD 20 INCHES BELOW GROUND TO MARK FUTURE SURVEY MARKER POSITION.
- PERMANENT SURVEY MARKER, I.D.O.T. STANDARD 2135 (TO BE SET BY OTHERS)
- □ RIGHT OF WAY STAKING PROPOSED TO BE SET

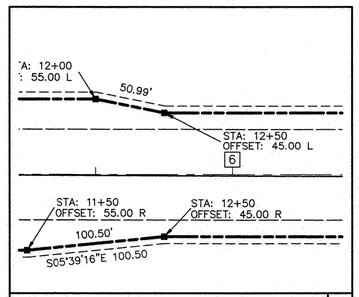

STATION 12+50 45.00 L HIGHWAY MONUMENT 6

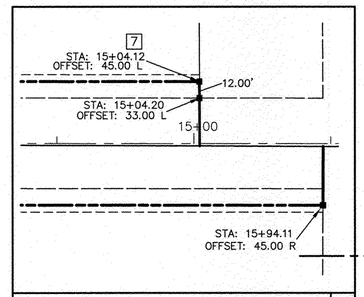

STATION 15+04.12 45.00 L HIGHWAY MONUMENT 7

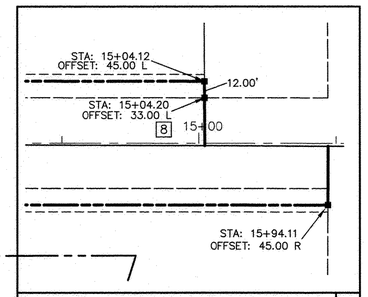

STATION 15+04.20 33.00 L HIGHWAY MONUMENT 8

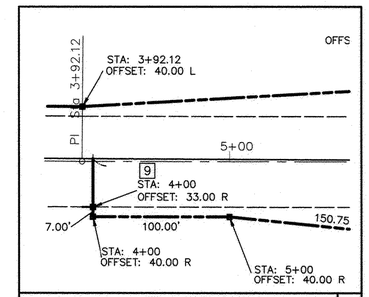

STATION 4+00 33.00 R HIGHWAY MONUMENT 9

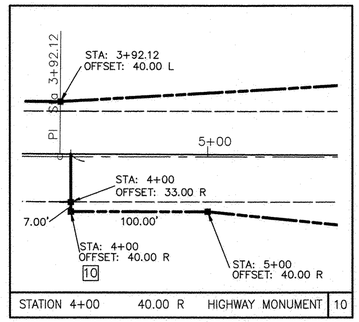

STATION 4+00 40.00 R HIGHWAY MONUMENT 10

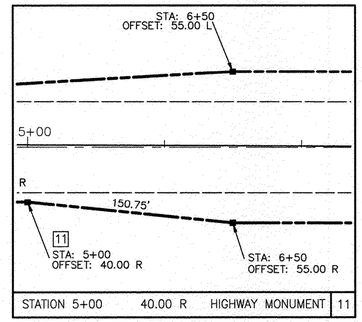

STATION 5+00 40.00 R HIGHWAY MONUMENT 11

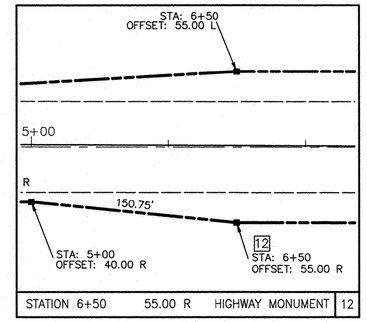

STATION 6+50 55.00 R HIGHWAY MONUMENT 12

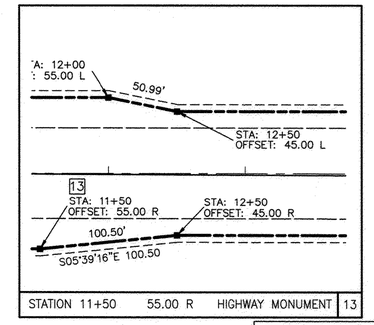

STATION 11+50 55.00 R HIGHWAY MONUMENT 13

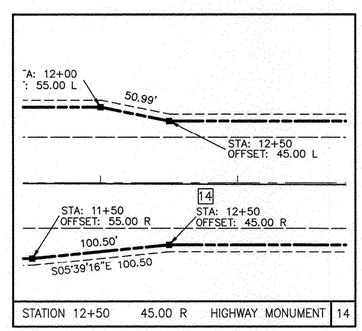

STATION 12+50 45.00 R HIGHWAY MONUMENT 14

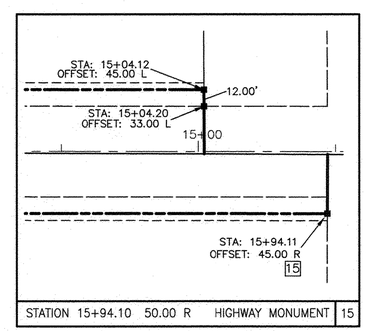

STATION 15+94.10 50.00 R HIGHWAY MONUMENT 15

COMPASS SURVEYING LTD

2631 GINGER WOODS PARKWAY, STE. 100
AURORA, IL 60502
PHONE: (630) 820-9100 FAX: (630) 820-7030
JOB NO. 9765PH

REVISION	
DATE	DESCRIPTION

KANE COUNTY DIVISION OF TRANSPORTATION
PLAT OF HIGHWAYS
CH 46 (WALKER ROAD OVER BURLINGTON CREEK)

SECTION 08-00133-01-BR
COUNTY KANE
JOB# P-91-272-09 PROJECT# BROS-0089(155)
STA 3+20 TO STA 15+94.27
DRAWN MRA CHECKED DW
SCALE: 1" = 50' SHEET NO. 3 OF 3

ROUTE: CH 46 SECTION: 08-00133-01-BR COUNTY: KANE JOB: P-91-272-09 RECORDING: RECORDED ON / / AS DOCUMENT NO.

G:\Psdata\8000\8755\DOT\8755_POHwy_IDOT_3of3.dwg

R.O.W. PLAT	BY	DATE
MADE		
CHECKED		
INKED		
NOTEBOOK NO.		

FILE NAME = W:\Projects\2013\130174 WalkerPhil\cadd\Civil\Dgn\Sht\PLAT_03.dgn

WILLS BURKE KELSEY ASSOCIATES LTD.
116 West Main Street, Suite 201
St. Charles, Illinois 60174

USER NAME = nparris	DESIGNED -	REVISED -	
	DRAWN -	REVISED -	
PLOT SCALE = 1:10	CHECKED -	REVISED -	
PLOT DATE = 9/8/2014	DATE -	REVISED -	

STATE OF ILLINOIS
DEPARTMENT OF TRANSPORTATION

PLAT OF HIGHWAYS
FOR REFERENCE ONLY

SCALE: SHEET NO. 3 OF 3 SHEETS STA. TO STA.

C.H. RTE.	SECTION	COUNTY	TOTAL SHEETS	SHEET NO.
46	08-00133-01-BR	KANE	87	35
		CONTRACT NO.XXXXXX		
		ILLINOIS FED. AID PROJECT		

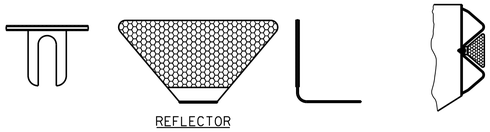

GUARDRAIL MARKER, TYPE A

GUARDRAIL MARKER NOTE:

1. GUARDRAIL MARKERS SHALL BE REFLECTIVE ON BOTH SIDES OF THE MARKER CONSISTING OF AMBER (OPPOSING TRAFFIC) ON ONE SIDE AND WHITE (ONCOMING TRAFFIC) ON THE OTHER SIDE. SEE SPECIAL PROVISIONS.

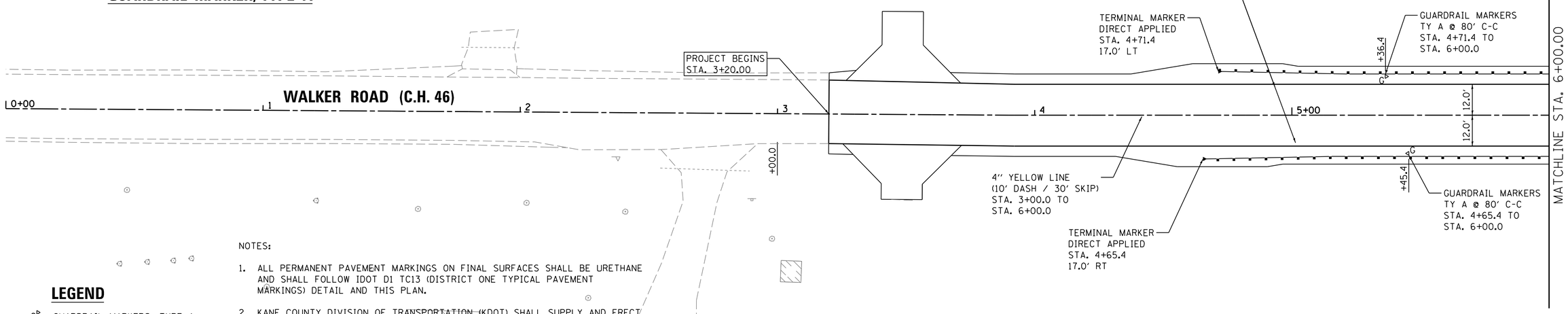

NOTES:

1. ALL PERMANENT PAVEMENT MARKINGS ON FINAL SURFACES SHALL BE URETHANE AND SHALL FOLLOW IDOT D1 TC13 (DISTRICT ONE TYPICAL PAVEMENT MARKINGS) DETAIL AND THIS PLAN.
2. KANE COUNTY DIVISION OF TRANSPORTATION (KDOT) SHALL SUPPLY AND ERECT THE KANE COUNTY STREAMS SIGNS & NAME PLATES FOR THIS PROJECT. THE CONTRACTOR SHALL COORDINATE ALL SIGN INSTALLATION WORK WITH THE ENGINEER AND KDOT.

LEGEND

G GUARDRAIL MARKERS, TYPE A (78200410)

SIGN

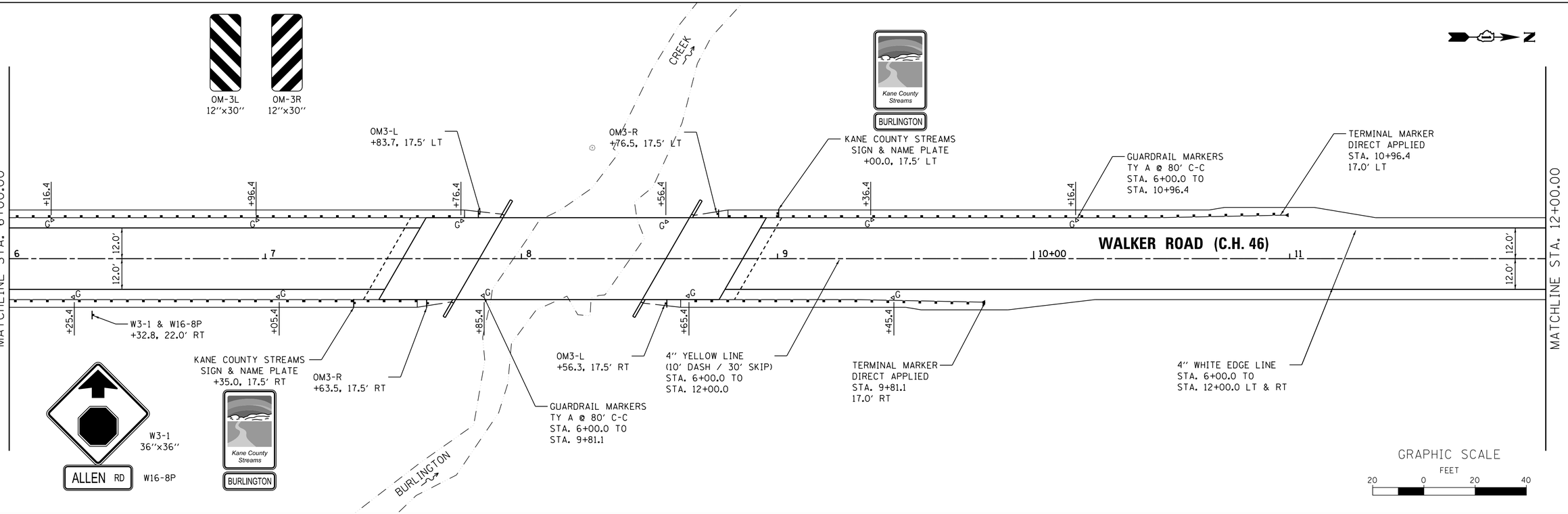

FILE NAME = W:\Projects\2013\130174 WalkerPhil\cadd\Civil\Dgn\Sht\PMK.01.dgn

WILLS BURKE KELSEY ASSOCIATES LTD. 116 West Main Street, Suite 201 St. Charles, Illinois 60174	USER NAME = nparris	DESIGNED -	REVISED -	STATE OF ILLINOIS DEPARTMENT OF TRANSPORTATION	PAVEMENT MARKING & SIGNING PLAN	C.H. RTE.	SECTION	COUNTY	TOTAL SHEETS / SHEET NO.
		DRAWN -	REVISED -			46	08-00133-01-BR	KANE	87 / 36
	PLOT SCALE = 1:20	CHECKED -	REVISED -					CONTRACT NO.XXXXXX	
	PLOT DATE = 9/8/2014	DATE -	REVISED -		SCALE: 1"=20' SHEET NO. 1 OF 2 SHEETS STA. 3+20.00 TO STA. 12+00.00		ILLINOIS FED. AID PROJECT		

LEGEND

G^A GUARDRAIL MARKERS, TYPE A (78200410)

SIGN

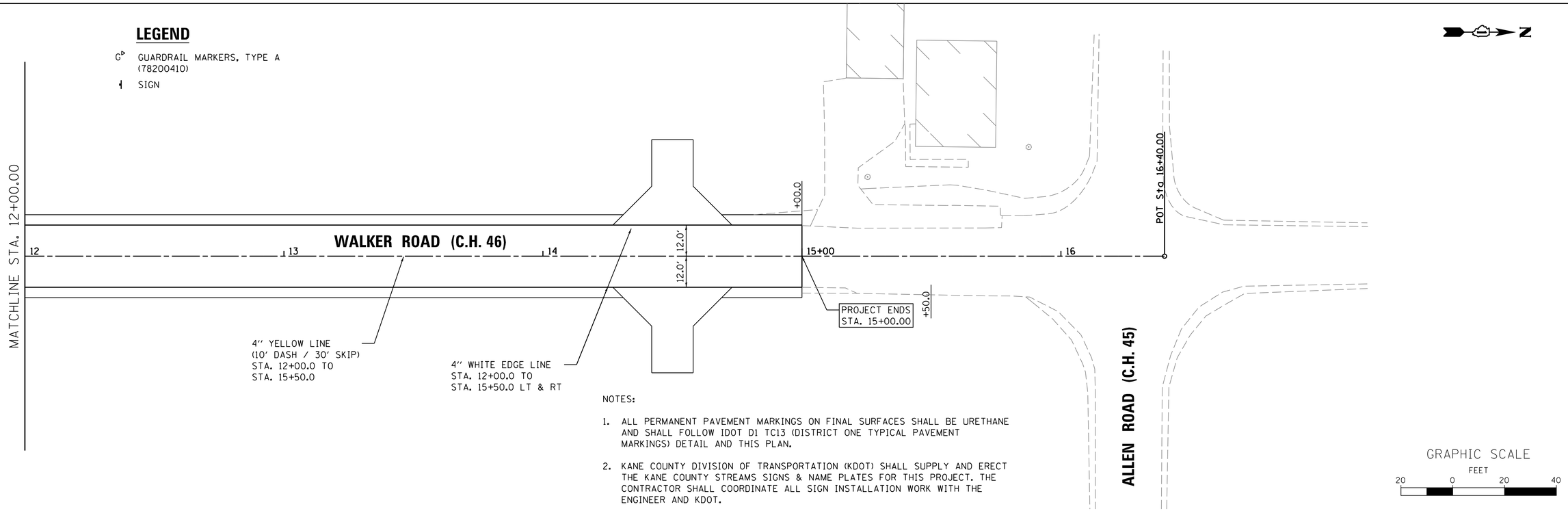

NOTES:

1. ALL PERMANENT PAVEMENT MARKINGS ON FINAL SURFACES SHALL BE URETHANE AND SHALL FOLLOW IDOT D1 TC13 (DISTRICT ONE TYPICAL PAVEMENT MARKINGS) DETAIL AND THIS PLAN.

2. KANE COUNTY DIVISION OF TRANSPORTATION (KDOT) SHALL SUPPLY AND ERECT THE KANE COUNTY STREAMS SIGNS & NAME PLATES FOR THIS PROJECT. THE CONTRACTOR SHALL COORDINATE ALL SIGN INSTALLATION WORK WITH THE ENGINEER AND KDOT.

FILE NAME = W:\Projects\2013\130174 WalkerPhil\cadd\Civil\Dgn\Sht\PMK_02.dgn

WILLS BURKE KELSEY ASSOCIATES LTD.
116 West Main Street, Suite 201
St. Charles, Illinois 60174

USER NAME = nparris	DESIGNED -	REVISED -
	DRAWN -	REVISED -
PLOT SCALE = 1:20	CHECKED -	REVISED -
PLOT DATE = 9/8/2014	DATE -	REVISED -

STATE OF ILLINOIS
DEPARTMENT OF TRANSPORTATION

PAVEMENT MARKING & SIGNING PLAN

SCALE: 1"=20' | SHEET NO. 2 OF 2 SHEETS | STA. 12+00.00 TO STA. 15+00.00

C.H. RTE.	SECTION	COUNTY	TOTAL SHEETS	SHEET NO.
46	08-00133-01-BR	KANE	87	37
		CONTRACT NO.XXXXXX		
	ILLINOIS	FED. AID PROJECT		

BENCHMARK

Disk set in top of concrete monument; located 29.5 feet south of the centerline of Illinois Route 72 and 1.6 miles east of State Street. Elev. 981.00

EXISTING STRUCTURE

Structure #045-3036 was originally built in 1946 under Sec. 133B-MFT. The two-span structure consists of a 14" thick cast-in-place reinforced concrete slab supported on reinforced concrete closed abutments and solid wall pier. The structure measures 48'-10 9/16" back to back abutments and 28'-6" out-to-out of deck.

The existing bridge to be removed and replaced while traffic is detoured.

SALVAGE

None

WATERWAY INFORMATION

Drainage Area = 15.8 sq. mi. Exist. Low Grade Elev. 843.04 at Sta. 7+68
Prop. Low Grade Elev. 844.00 at Sta. 12+05

Flood	Freq. Yr.	Q C.F.S.	Opening Sq. Ft. Exist.	Opening Sq. Ft. Prop.	Nat. H.W.E.	Head - Ft. Exist.	Head - Ft. Prop.	Headwater El. Exist.	Headwater El. Prop.
	10	1760	205.9	248.1	841.5	1.7	0.6	843.2	842.1
Design	30	2597	205.9	265.6	841.9	2.0	1.0	843.9	842.9
Base	50	3016	205.9	268.4	842.1	2.3	1.2	844.4	843.3
Overtopping									
Max. Calc.	100	3505	205.9	280.1	842.3	2.3	1.4	844.6	843.7

10-Year Velocity through Existing Bridge = 5.3 ft/s
10-Year Velocity through Proposed Bridge = 5.3 ft/s

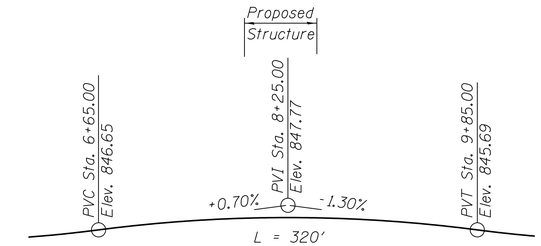

PROFILE GRADE

(Along ℄ Walker Road)

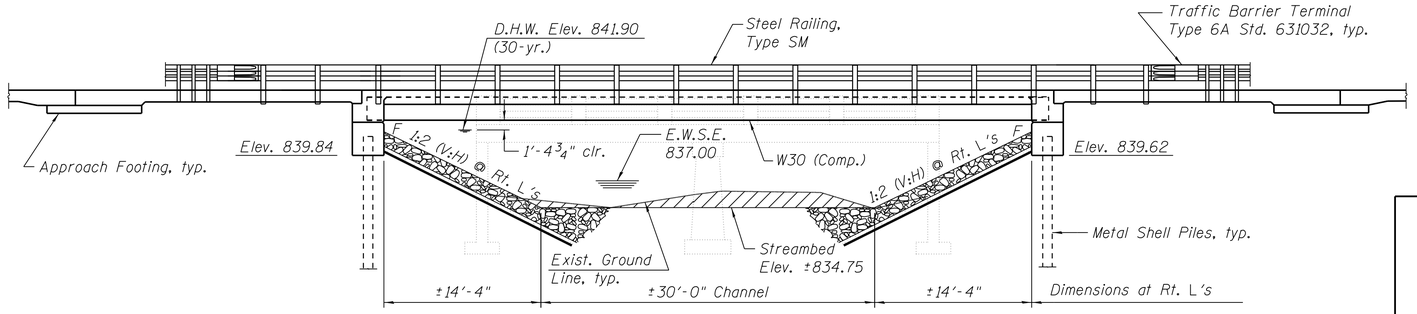

ELEVATION

DESIGN SCOUR ELEVATION TABLE

Design Scour Elevation (ft.)	S. Abut.	N. Abut.
	839.84	839.62

BURLINGTON CREEK
BUILT 20XX BY
KANE COUNTY
SEC. 08-00133-01-BR
STA. 8+20.00
STR. NO. 045-3065 LOADING HL-93

NAME PLATE

See Std. 515001

INDEX OF SHEETS

DESIGN STRESSES

FIELD UNITS

f'c = 5,000 psi (Superstructure)
f'c = 3,500 psi (Substructure)
fy = 60,000 psi (Reinforcement)
fy = 50,000 psi (M270 Grade 50W)

DESIGN SPECIFICATIONS

2012 AASHTO LRFD Bridge Design Specifications, 6th Edition with 2013 Interim Revisions

LOADING HL-93

Allow 50#/sq. ft. for future wearing surface.

SEISMIC DATA

Seismic Performance Zone (SPZ) = 1
Design Spectral Acceleration at 1.0 sec. (S_{D1}) = 0.083g
Design Spectral Acceleration at 0.2 sec. (S_{DS}) = 0.146g
Soil Site Class = D

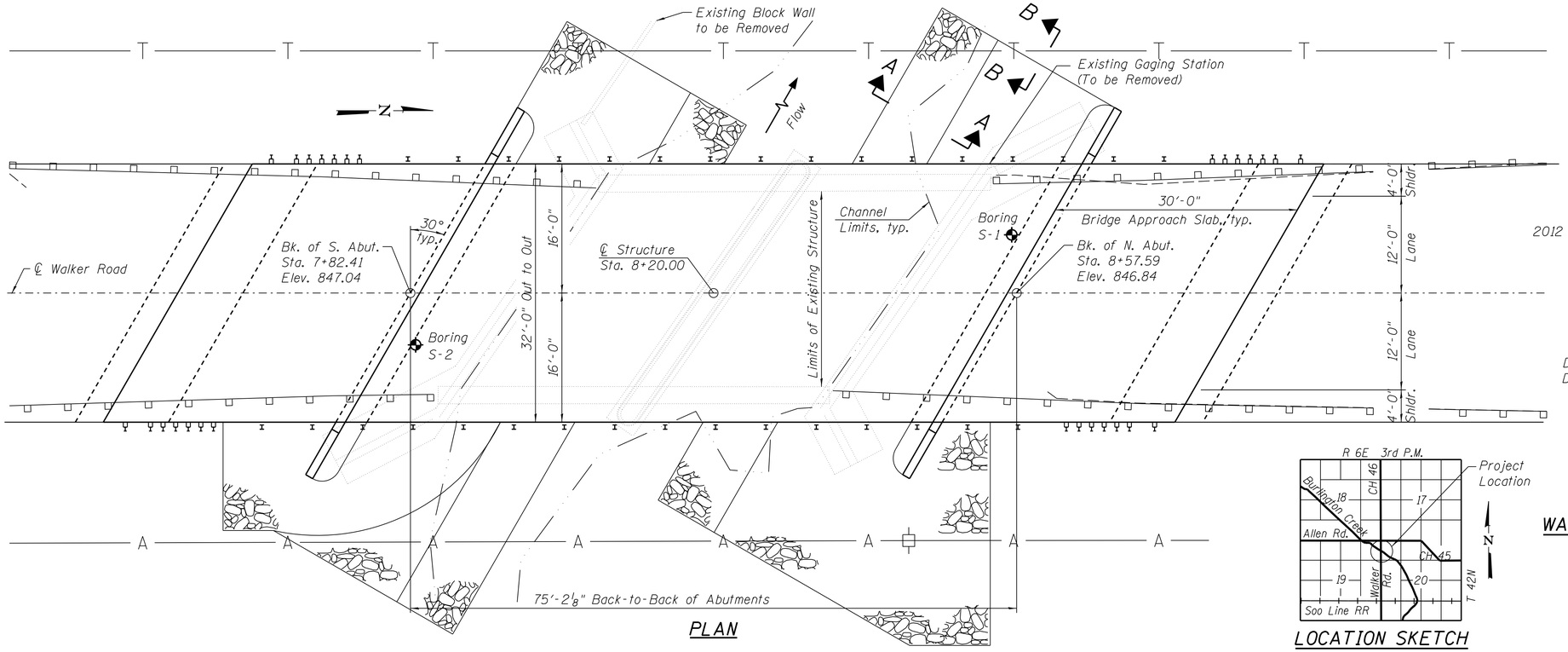

PLAN

LOCATION SKETCH

GENERAL PLAN AND ELEVATION
WALKER ROAD OVER BURLINGTON CREEK
SECTION 08-00133-01-BR
KANE COUNTY
STATION 8+20.00
STRUCTURE NO. 045-3065

FILE NAME = W:\Projects\2013\13074 WalkerPhil\cadd\Structural\Dgn\0453065-001-GPE.dgn

WILLS BURKE KELSEY ASSOCIATES LTD.
116 West Main Street, Suite 201
St. Charles, Illinois 60174

USER NAME = nparris	DESIGNED - JMM	REVISED -	
	CHECKED - AEU	REVISED -	
PLOT SCALE = $SCALE$	DRAWN - JMM	REVISED -	
PLOT DATE = 9/8/2014	CHECKED - AEU	REVISED -	

KANE COUNTY
DIVISION OF TRANSPORTATION

GENERAL PLAN & ELEVATION
STRUCTURE NO. 045-3065

SHEET NO. 1 OF 22 SHEETS

C.H.	SECTION	COUNTY	TOTAL SHEETS	SHEET NO.
46	08-00133-01-BR	KANE	87	38
		CONTRACT NO. XXXXX		
		ILLINOIS FED. AID PROJECT		

GENERAL NOTES

1. Fasteners shall be AASHTO M164 Type 1, mechanically galvanized bolts in painted areas and M164 Type 3 in unpainted areas. Bolts $\frac{7}{8}$ in. ϕ. holes $\frac{15}{16}$ in. ϕ. unless otherwise noted.
2. Calculated weight of Structural Steel = XX,XXX lbs. (Grade 50W)
3. All structural steel shall be AASHTO M 270 Grade 50W.
4. No field welding is permitted except as specified in the contract documents.
5. Reinforcement bars designated (E) shall be epoxy coated.
6. Structural steel shall only be painted for a distance equal to the depth of embedment into the concrete cap plus 3 inches. Painted areas shall be primed in the shop with a Department approved zinc rich primer. Field painting will not be required.
7. Layout of slope protection system may be varied to suit ground conditions in the field as directed by the Engineer.
8. The embankment configuration shown shall be the minimum that must be placed and compacted prior to construction of the abutments.
9. Existing bridge railing to be removed. Cost included in the pay item "Removal of Existing Structures."
10. Existing bituminous wearing surface to be removed. Cost included in the pay item "Removal of Existing Structures."
11. The Contractor is advised that the existing structure contains members that are in a deteriorated condition with reduced load carrying capacity. It is the Contractor's responsibility to account for the condition of the existing structure when developing construction procedures for the complete or partial removal or replacement of the structure.

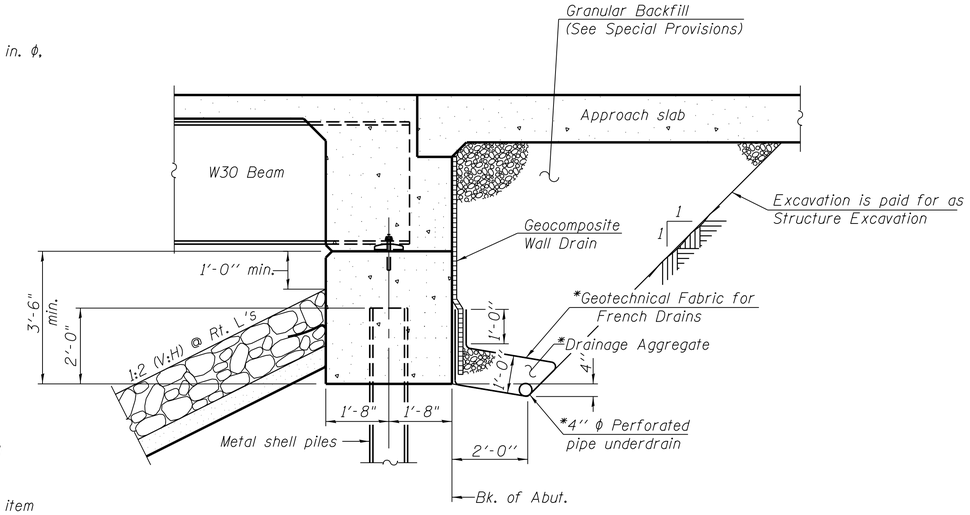

SECTION THRU INTEGRAL ABUTMENT

(Horiz. dim. @ Rt. L's)

*Included in the cost of Pipe Underdrains for Structures. (See Special Provisions)

Note:
All drainage system components shall extend to 2'-0" from the end of each wingwall except an outlet pipe shall extend until intersecting with the side slopes. The pipes shall drain into concrete headwalls. (See Article 601.05 of the Standard Specifications and Highway Standard 601101).

TOTAL BILL OF MATERIAL

ITEM	UNIT	SUPER	SUB	TOTAL
Stone Riprap, Class A4	Sq. Yd.		469	469
Filter Fabric	Sq. Yd.		469	469
Removal of Existing Structures	Each		1	1
Structure Excavation	Cu. Yd.		75	75
Concrete Structures	Cu. Yd.		59.4	59.4
Concrete Superstructure	Cu. Yd.	186.9		186.9
Bridge Deck Grooving	Sq. Yd.	474		474
Protective Coat	Sq. Yd.	474		474
Furnishing and Erecting Structural Steel	L Sum		1	1
Stud Shear Connectors	Each	1,062		1,062
Reinforcement Bars, Epoxy Coated	Pound	41,480	13,470	54,950
Steel Railing, Type SM	Foot	206		206
Furnishing Metal Shell Piles 14" x 0.250"	Foot		525	525
Driving Piles	Foot		525	525
Test Pile Metal Shells	Each		2	2
Name Plates	Each	1		1
Anchor Bolts, 1"	Each		24	24
Geocomposite Wall Drain	Sq. Yd.		31	31
Granular Backfill for Structures	Cu. Yd.		95	95
Pipe Underdrains for Structures, 4"	Foot		124	124

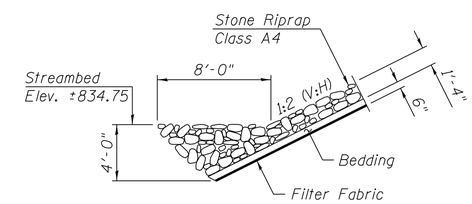

SECTION A-A

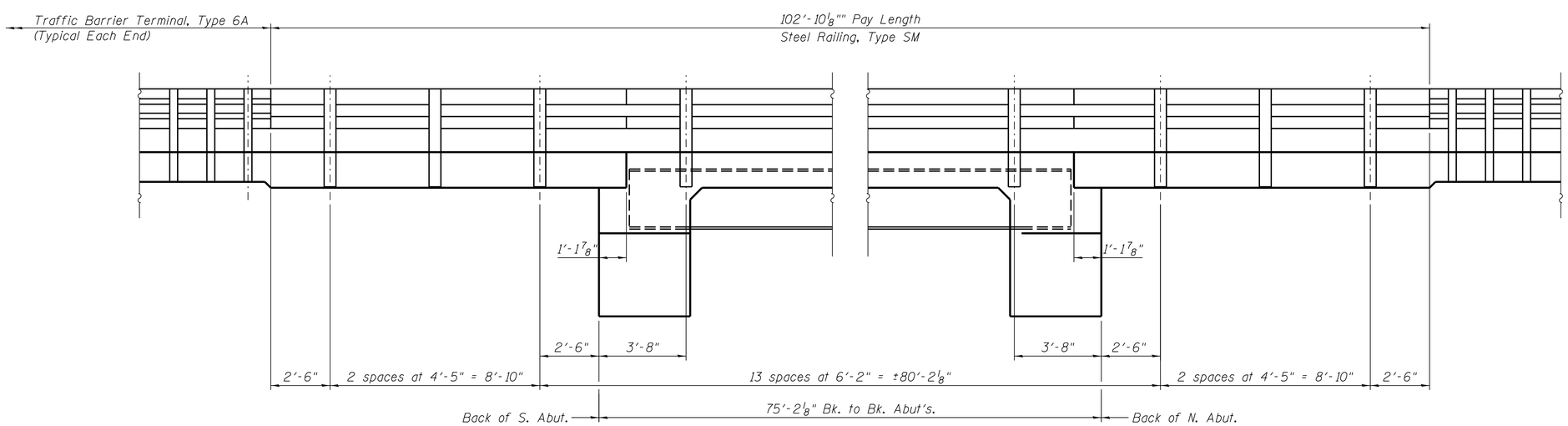

RAIL POST SPACING

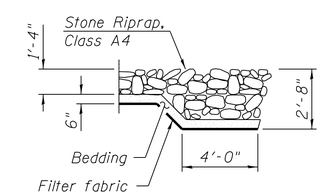

SECTION B-B

WILLS BURKE KELSEY ASSOCIATES LTD. 116 West Main Street, Suite 201 St. Charles, Illinois 60174	USER NAME = nparris	DESIGNED - JMM	REVISED -
		CHECKED - AEU	REVISED -
	PLOT SCALE = $SCALE$	DRAWN - JMM	REVISED -
	PLOT DATE = 9/8/2014	CHECKED - AEU	REVISED -

KANE COUNTY
DIVISION OF TRANSPORTATION

GENERAL DATA
STRUCTURE NO. 045-3065

SHEET NO. 2 OF 22 SHEETS

C.H.	SECTION	COUNTY	TOTAL SHEETS	SHEET NO.
46	08-00133-01-BR	KANE	87	39
		CONTRACT NO. XXXXX		
		ILLINOIS FED. AID PROJECT		

FILE NAME = W:\Projects\2013\130174 WalkerPhil\cadd\Structural\Dgn\0453065-002-GenData.dgn

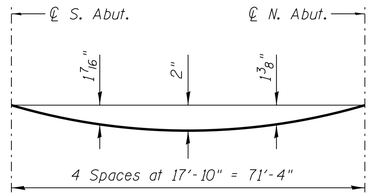

DEAD LOAD DEFLECTION DIAGRAM

(Includes weight of concrete only.)

Note:
The above deflections are not to be used in the field if the engineer is working from the grade elevations adjusted for dead load deflections on Sheet 4 of 22.

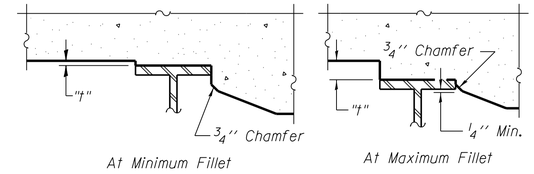

To determine "t": After all structural steel has been erected, elevations of the top flanges of the beams shall be taken at intervals shown below. These elevations subtracted from the "Theoretical Grade Elevations Adjusted for Dead Load Deflection" shown below, minus slab thickness, equals the fillet heights "t" above top flange of beams.

FILLET HEIGHTS

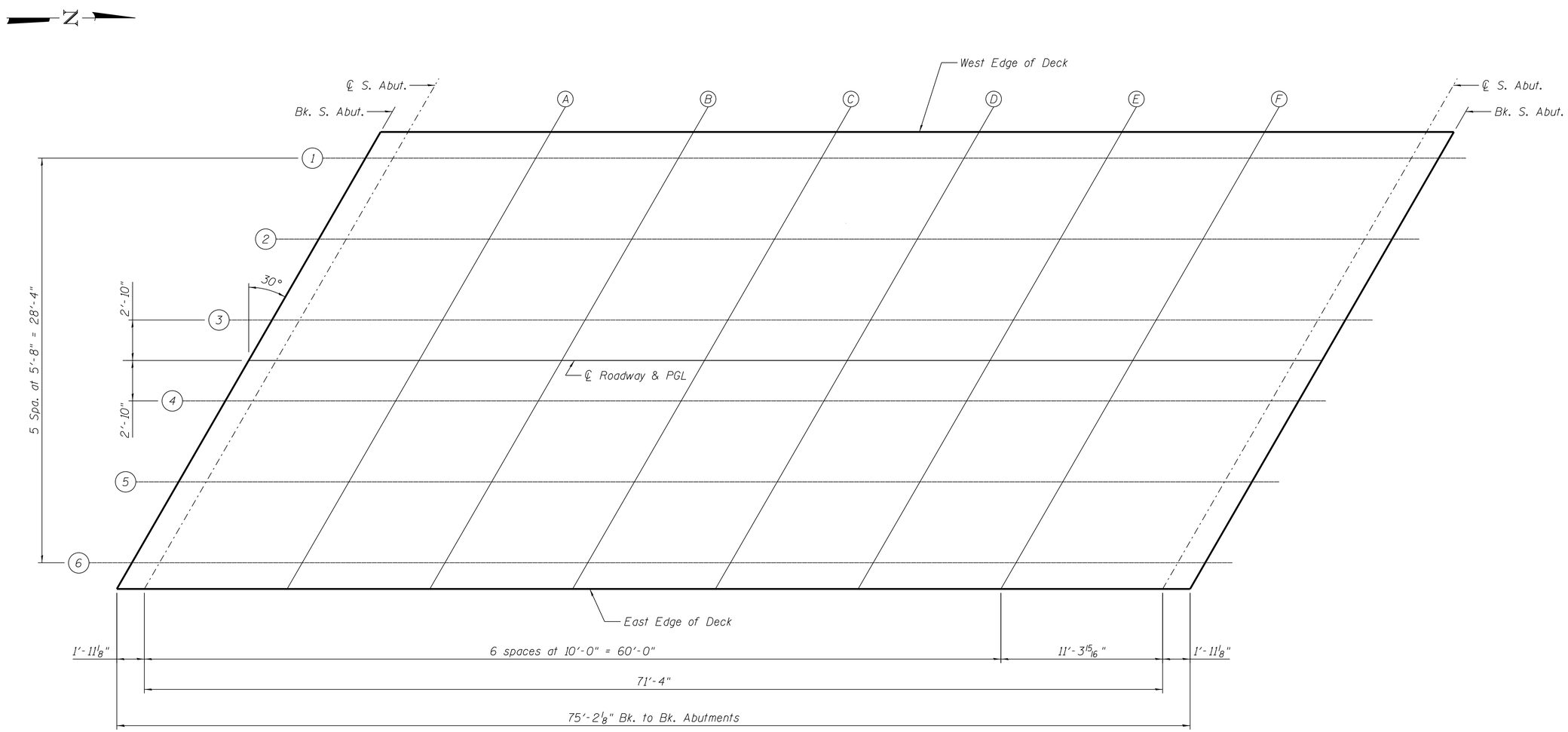

FILE NAME = W:\Projects\2013\130174 WalkerPhil\cadd\Structural\Dgn\045-3065-003-TopSlabPlan.dgn

WILLS BURKE KELSEY ASSOCIATES LTD. 116 West Main Street, Suite 201 St. Charles, Illinois 60174	USER NAME = nparris	DESIGNED - JMM	REVISED -	KANE COUNTY DIVISION OF TRANSPORTATION	TOP OF SLAB ELEVATIONS STRUCTURE NO. 045-3065	C.H.	SECTION	COUNTY	TOTAL SHEETS	SHEET NO.
		CHECKED - AEU	REVISED -			46	08-00133-01-BR	KANE	87	40
	PLOT SCALE = $SCALE$	DRAWN - JMM	REVISED -			CONTRACT NO. XXXXX				
	PLOT DATE = 9/8/2014	CHECKED - AEU	REVISED -		SHEET NO. 3 OF 22 SHEETS	ILLINOIS FED. AID PROJECT				

BEAM 1

Location	Station	Offset	Theoretical Grade Elevations	Theoretical Grade Elevations Adjusted For Dead Load Deflection
Bk. S. Abut.	7+90.59	-14.17	846.80	846.80
℄ Brg. S. Abut.	7+92.51	-14.17	846.80	846.80
A	8+02.51	-14.17	846.79	846.86
B	8+12.51	-14.17	846.77	846.90
C	8+22.51	-14.17	846.74	846.91
D	8+32.51	-14.17	846.71	846.88
E	8+42.51	-14.17	846.68	846.81
F	8+52.51	-14.17	846.63	846.71
℄ Brg. N. Abut.	8+63.85	-14.17	846.57	846.57
Bk. N. Abut.	8+65.77	-14.17	846.56	846.56

BEAM 2

Location	Station	Offset	Theoretical Grade Elevations	Theoretical Grade Elevations Adjusted For Dead Load Deflection
Bk. S. Abut.	7+87.32	-8.50	846.91	846.91
℄ Brg. S. Abut.	7+89.24	-8.50	846.90	846.90
A	7+99.24	-8.50	846.89	846.96
B	8+09.24	-8.50	846.88	846.00
C	8+19.24	-8.50	846.85	846.01
D	8+29.24	-8.50	846.82	846.99
E	8+39.24	-8.50	846.79	846.92
F	8+49.24	-8.50	846.75	846.82
℄ Brg. N. Abut.	8+60.58	-8.50	846.69	846.69
Bk. N. Abut.	8+62.50	-8.50	846.68	846.68

BEAM 3

Location	Station	Offset	Theoretical Grade Elevations	Theoretical Grade Elevations Adjusted For Dead Load Deflection
Bk. S. Abut.	7+84.05	-2.83	847.00	847.00
℄ Brg. S. Abut.	7+85.97	-2.83	847.00	847.00
A	7+95.97	-2.83	846.99	847.06
B	8+05.97	-2.83	846.97	847.10
C	8+15.97	-2.83	846.95	847.11
D	8+25.97	-2.83	846.92	847.09
E	8+35.97	-2.83	846.89	847.02
F	8+45.97	-2.83	846.85	846.93
℄ Brg. N. Abut.	8+57.31	-2.83	846.80	846.80
Bk. N. Abut.	8+59.23	-2.83	846.79	846.79

℄ ROADWAY & P.G.

Location	Station	Offset	Theoretical Grade Elevations	Theoretical Grade Elevations Adjusted For Dead Load Deflection
Bk. S. Abut.	7+82.41	0.00	847.04	847.04
℄ Brg. S. Abut.	7+84.33	0.00	847.04	847.04
A	7+94.33	0.00	847.03	847.10
B	8+04.33	0.00	847.02	847.15
C	8+14.33	0.00	847.00	847.16
D	8+24.33	0.00	846.97	847.14
E	8+34.33	0.00	846.94	847.07
F	8+44.33	0.00	846.90	846.98
℄ Brg. N. Abut.	8+55.67	0.00	846.85	846.85
Bk. N. Abut.	8+57.59	0.00	846.84	846.84

BEAM 4

Location	Station	Offset	Theoretical Grade Elevations	Theoretical Grade Elevations Adjusted For Dead Load Deflection
Bk. S. Abut.	7+80.77	2.83	847.00	847.00
℄ Brg. S. Abut.	7+82.69	2.83	847.00	847.00
A	7+92.69	2.83	846.99	847.06
B	8+02.69	2.83	846.98	847.11
C	8+12.69	2.83	846.96	847.12
D	8+22.69	2.83	846.93	847.10
E	8+32.69	2.83	846.90	847.03
F	8+42.69	2.83	846.86	846.94
℄ Brg. N. Abut.	8+54.03	2.83	846.81	846.81
Bk. N. Abut.	8+55.95	2.83	846.80	846.80

BEAM 5

Location	Station	Offset	Theoretical Grade Elevations	Theoretical Grade Elevations Adjusted For Dead Load Deflection
Bk. S. Abut.	7+77.50	8.50	846.91	846.91
℄ Brg. S. Abut.	7+79.42	8.50	846.91	846.91
A	7+89.42	8.50	846.90	846.97
B	7+99.42	8.50	846.89	847.02
C	8+09.42	8.50	846.88	847.04
D	8+19.42	8.50	846.85	847.02
E	8+29.42	8.50	846.82	846.96
F	8+39.42	8.50	846.79	846.87
℄ Brg. N. Abut.	8+50.76	8.50	846.74	846.74
Bk. N. Abut.	8+52.68	8.50	846.73	846.73

BEAM 6

Location	Station	Offset	Theoretical Grade Elevations	Theoretical Grade Elevations Adjusted For Dead Load Deflection
Bk. S. Abut.	7+74.23	14.17	846.81	846.81
℄ Brg. S. Abut.	7+76.15	14.17	846.81	846.81
A	7+86.15	14.17	846.81	846.88
B	7+96.15	14.17	846.80	846.93
C	8+06.15	14.17	846.78	846.94
D	8+16.15	14.17	846.76	846.92
E	8+26.15	14.17	846.73	846.87
F	8+36.15	14.17	846.70	846.78
℄ Brg. N. Abut.	8+47.49	14.17	846.65	846.65
Bk. N. Abut.	8+49.41	14.17	846.65	846.65

WEST EDGE OF DECK

Location	Station	Offset	Theoretical Grade Elevations	Theoretical Grade Elevations Adjusted For Dead Load Deflection
Bk. S. Abut.	7+91.65	-16.00	846.76	846.76
℄ Brg. S. Abut.	7+93.57	-16.00	846.76	846.76
A	8+03.57	-16.00	846.75	846.82
B	8+13.57	-16.00	846.73	846.86
C	8+23.57	-16.00	846.70	846.86
D	8+33.57	-16.00	846.67	846.83
E	8+43.57	-16.00	846.63	846.77
F	8+53.57	-16.00	846.59	846.67
℄ Brg. N. Abut.	8+64.91	-16.00	846.53	846.53
Bk. N. Abut.	8+66.83	-16.00	846.52	846.52

EAST EDGE OF DECK

Location	Station	Offset	Theoretical Grade Elevations	Theoretical Grade Elevations Adjusted For Dead Load Deflection
Bk. S. Abut.	7+73.17	16.00	846.77	846.77
℄ Brg. S. Abut.	7+75.09	16.00	846.77	846.77
A	7+85.09	16.00	846.77	846.84
B	7+95.09	16.00	846.76	846.89
C	8+05.09	16.00	846.75	846.91
D	8+15.09	16.00	846.73	846.89
E	8+25.09	16.00	846.70	846.83
F	8+35.09	16.00	846.67	846.74
℄ Brg. N. Abut.	8+46.43	16.00	846.62	846.62
Bk. N. Abut.	8+48.35	16.00	846.61	846.61

WEST EDGE OF SHOULDER

Location	Station	Offset	Theoretical Grade Elevations
S. End S. Appr. Slab	7+62.80	-16.00	846.76
A1	7+72.80	-16.00	846.77
A2	7+82.80	-16.00	846.77
N. End S. Appr. Slab	7+92.80	-16.00	846.76

WEST EDGE OF ROADWAY

Location	Station	Offset	Theoretical Grade Elevations
S. End S. Appr. Slab	7+60.49	-12.00	846.85
A1	7+70.49	-12.00	846.85
A2	7+80.49	-12.00	846.85
N. End S. Appr. Slab	7+90.49	-12.00	846.85

℄ ROADWAY & P.G.

Location	Station	Offset	Theoretical Grade Elevations
S. End S. Appr. Slab	7+53.57	0.00	847.02
A1	7+63.57	0.00	847.04
A2	7+73.57	0.00	847.04
N. End S. Appr. Slab	7+83.57	0.00	847.04

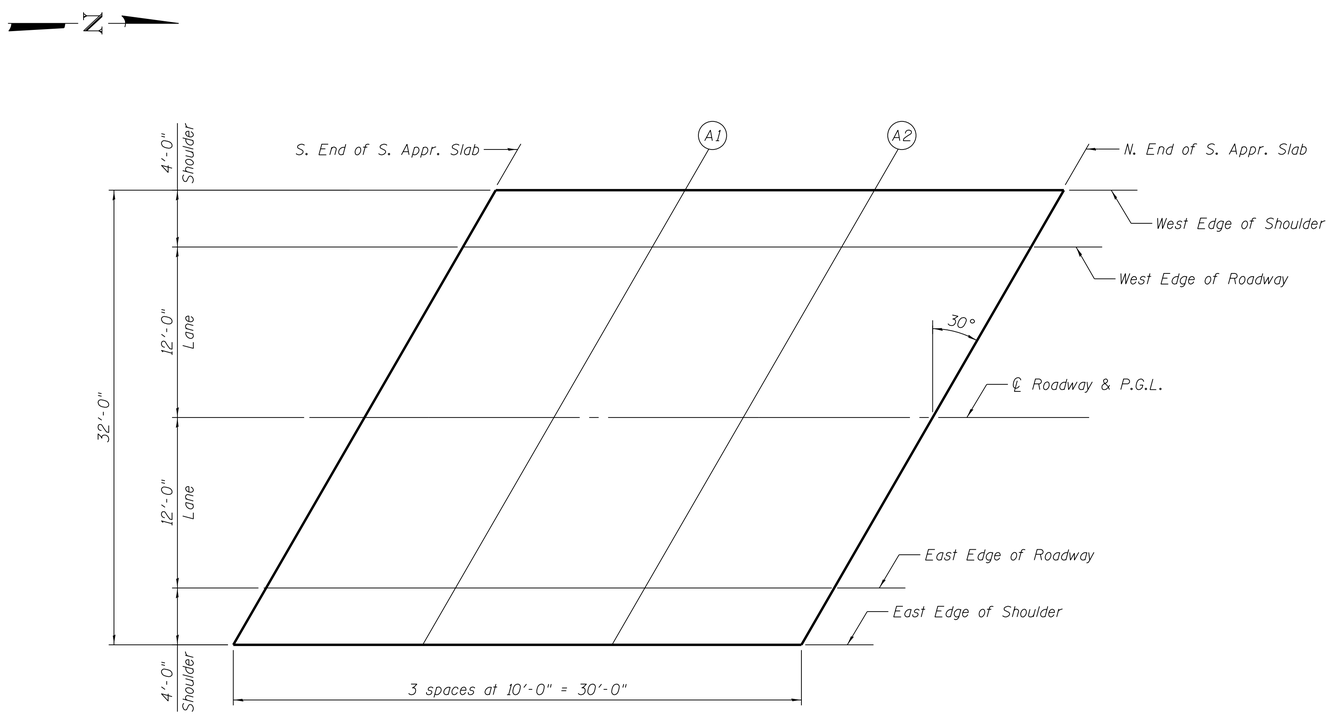

PLAN

EAST EDGE OF ROADWAY

Location	Station	Offset	Theoretical Grade Elevations
S. End S. Appr. Slab	7+46.64	12.00	846.83
A1	7+56.64	12.00	846.84
A2	7+66.64	12.00	846.85
N. End S. Appr. Slab	7+76.64	12.00	846.85

EAST EDGE OF SHOULDER

Location	Station	Offset	Theoretical Grade Elevations
S. End S. Appr. Slab	7+44.33	16.00	846.74
A1	7+54.33	16.00	846.76
A2	7+64.33	16.00	846.77
N. End S. Appr. Slab	7+74.33	16.00	846.77

FILE NAME = W:\Projects\2013\130174 KelkerPhil\cadd\Structural\Dgn\0453065-005-Top5App-SlabElev.dgn

WILLS BURKE KELSEY ASSOCIATES LTD.
116 West Main Street, Suite 201
St. Charles, Illinois 60174

USER NAME = nparris	DESIGNED - JMM	REVISED -	
	CHECKED - AEU	REVISED -	
PLOT SCALE = $SCALE$	DRAWN - JMM	REVISED -	
PLOT DATE = 9/8/2014	CHECKED - AEU	REVISED -	

KANE COUNTY
DIVISION OF TRANSPORTATION

TOP OF SOUTH APPROACH SLAB ELEVATIONS
STRUCTURE NO. 045-3065

SHEET NO. 5 OF 22 SHEETS

C.H.	SECTION	COUNTY	TOTAL SHEETS	SHEET NO.
46	08-00133-01-BR	KANE	87	42
		CONTRACT NO. XXXXX		
		ILLINOIS FED. AID PROJECT		

WEST EDGE OF SHOULDER

Location	Station	Offset	Theoretical Grade Elevations
S. End N. Appr. Slab	8+65.67	-16.00	846.53
A3	8+75.67	-16.00	846.47
A4	8+85.67	-16.00	846.40
N. End N. Appr. Slab	8+95.67	-16.00	846.33

WEST EDGE OF ROADWAY

Location	Station	Offset	Theoretical Grade Elevations
S. End N. Appr. Slab	8+63.36	-12.00	846.62
A3	8+73.36	-12.00	846.56
A4	8+83.36	-12.00	846.50
N. End N. Appr. Slab	8+93.36	-12.00	846.43

℄ ROADWAY & P.G.

Location	Station	Offset	Theoretical Grade Elevations
S. End N. Appr. Slab	8+56.43	0.00	846.84
A3	8+66.43	0.00	846.79
A4	8+76.43	0.00	846.73
N. End N. Appr. Slab	8+86.43	0.00	846.67

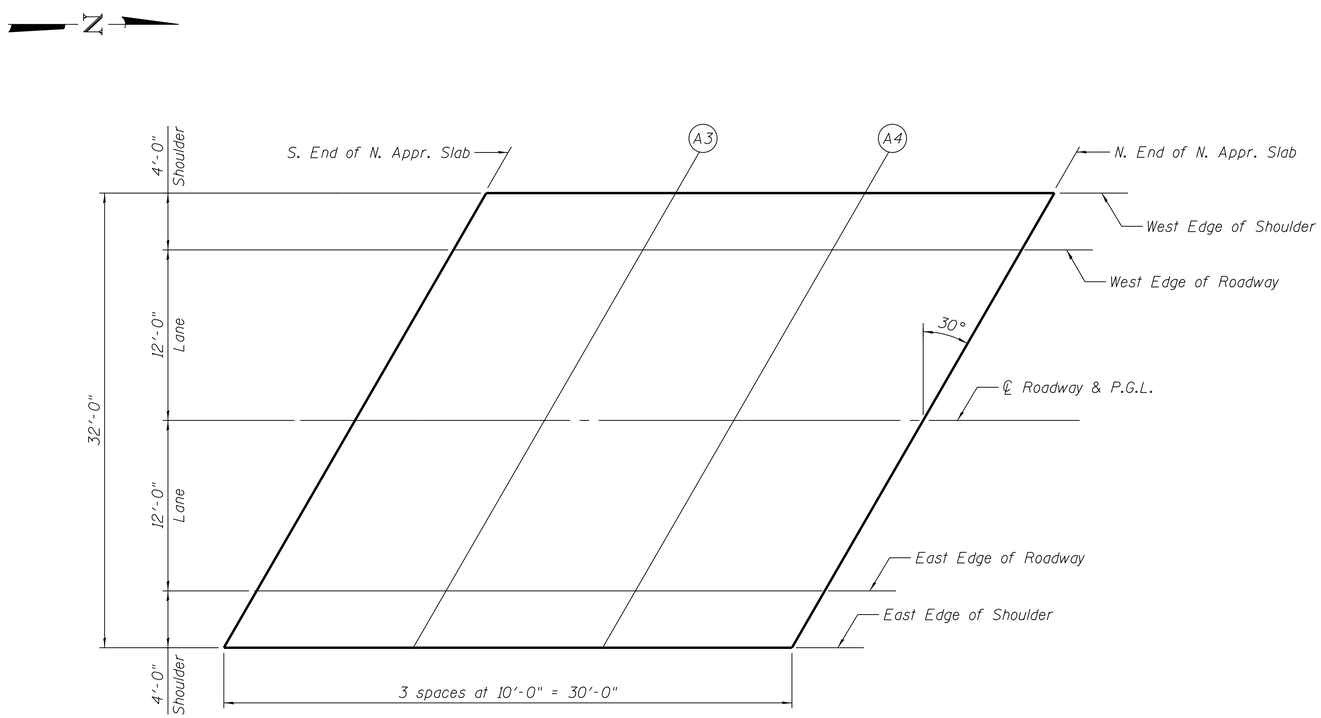

PLAN

EAST EDGE OF ROADWAY

Location	Station	Offset	Theoretical Grade Elevations
S. End N. Appr. Slab	8+49.51	12.00	846.69
A3	8+59.51	12.00	846.64
A4	8+69.51	12.00	846.59
N. End N. Appr. Slab	8+79.51	12.00	846.53

EAST EDGE OF SHOULDER

Location	Station	Offset	Theoretical Grade Elevations
S. End N. Appr. Slab	8+47.20	16.00	846.62
A3	8+57.20	16.00	846.57
A4	8+67.20	16.00	846.52
N. End N. Appr. Slab	8+77.20	16.00	846.46

FILE NAME = W:\Projects\2013\13074 WalkerPhil\cadd\Structural\Dgn\0453065-006-TopNAppr-SlabElev.dgn

WILLS BURKE KELSEY ASSOCIATES LTD.
116 West Main Street, Suite 201
St. Charles, Illinois 60174

USER NAME = nparris	DESIGNED - JMM	REVISED -	
	CHECKED - AEU	REVISED -	
PLOT SCALE = $SCALE$	DRAWN - JMM	REVISED -	
PLOT DATE = 9/8/2014	CHECKED - AEU	REVISED -	

KANE COUNTY
DIVISION OF TRANSPORTATION

TOP OF NORTH APPROACH SLAB ELEVATIONS
STRUCTURE NO. 045-3065

SHEET NO. 6 OF 22 SHEETS

C.H.	SECTION	COUNTY	TOTAL SHEETS	SHEET NO.
46	08-00133-01-BR	KANE	87	43

CONTRACT NO. XXXXX

ILLINOIS FED. AID PROJECT

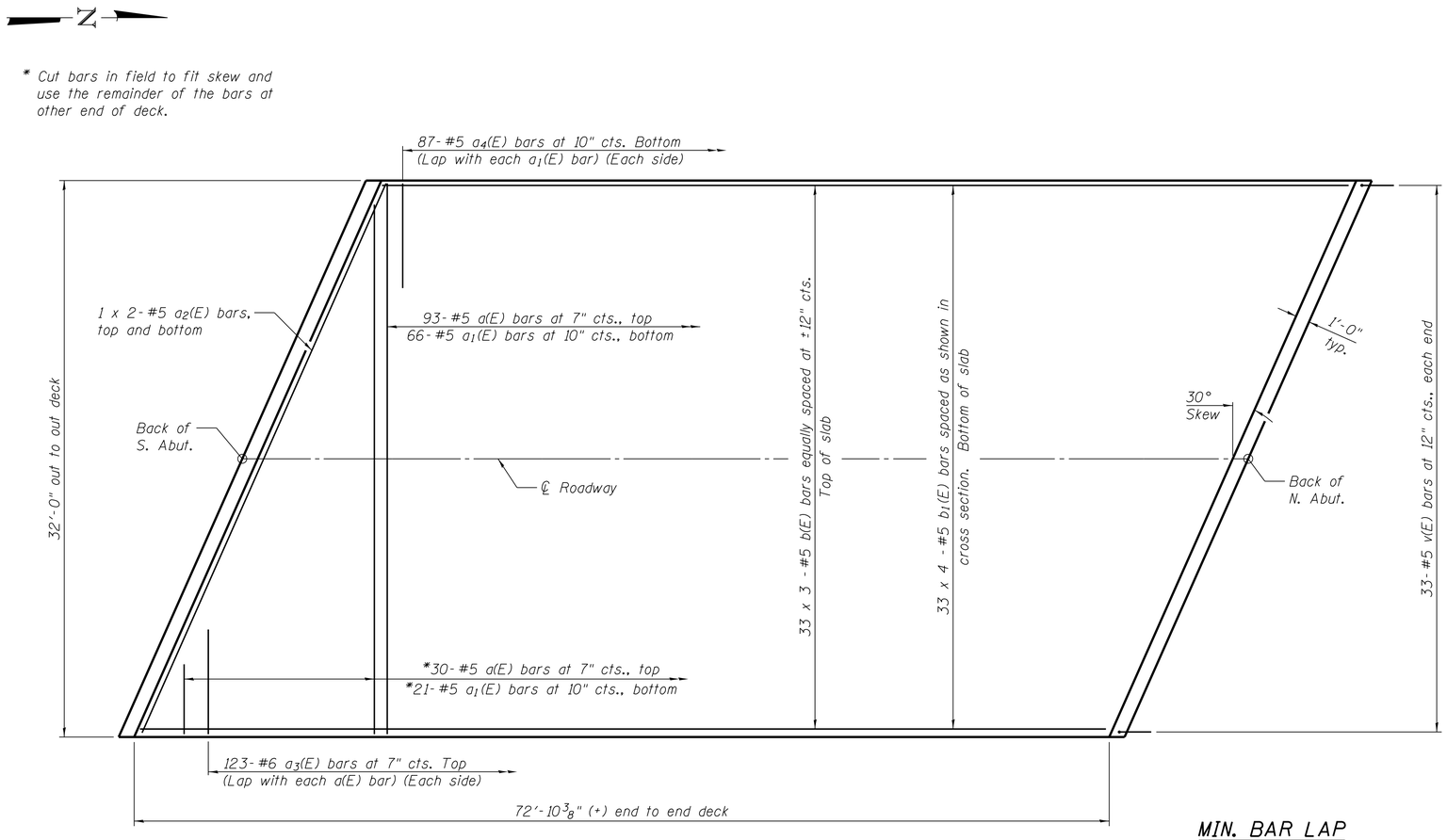

PLAN

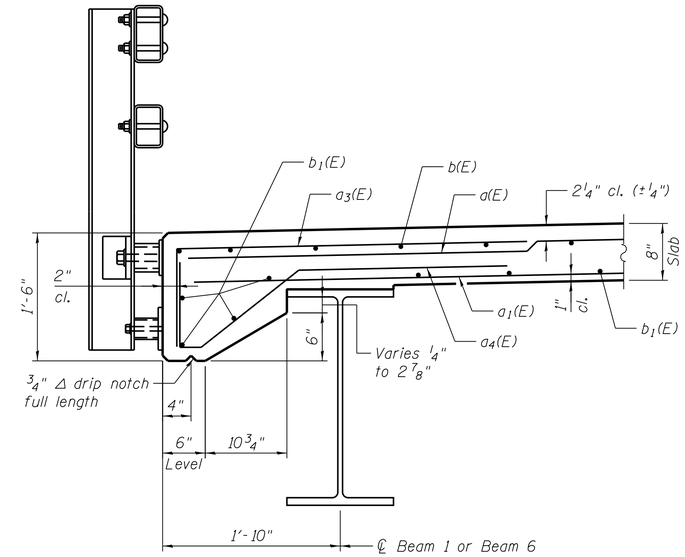

SECTION THRU EDGE OF SLAB

See Sheet 11 of 22 for Rail Post Anchor Details

MIN. BAR LAP

#5 Bar = 2'-7"

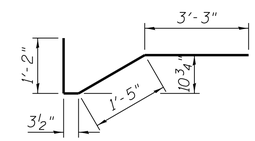

BAR a4(E)

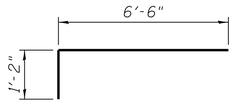

BAR a3(E)

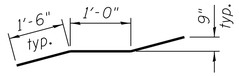

BAR m3(E)

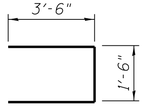

BAR s(E)

SUPERSTRUCTURE BILL OF MATERIAL

Bar	No.	Size	Length	Shape
a(E)	123	#5	31'-6"	
a1(E)	87	#5	31'-0"	
a2(E)	8	#5	19'-7"	
a3(E)	246	#6	7'-8"	
a4(E)	174	#5	6'-2"	
b(E)	99	#5	25'-11"	
b1(E)	132	#5	20'-1"	
m(E)	16	#6	19'-11"	
m1(E)	30	#6	6'-2"	
m2(E)	12	#6	1'-10"	
m3(E)	36	#5	4'-0"	
s(E)	68	#5	8'-6"	
s1(E)	68	#5	9'-4"	
v(E)	66	#5	3'-1"	
Reinforcement Bars, Epoxy Coated		Pound	18,830	
Bridge Deck Grooving		Sq. Yd.	260	
Protective Coat		Sq. Yd.	260	
Concrete Superstructures		Cu. Yd.	88.2	

Bars indicated thus 34 x 3- #5 etc. indicates 34 lines of bars with 3 lengths per line.

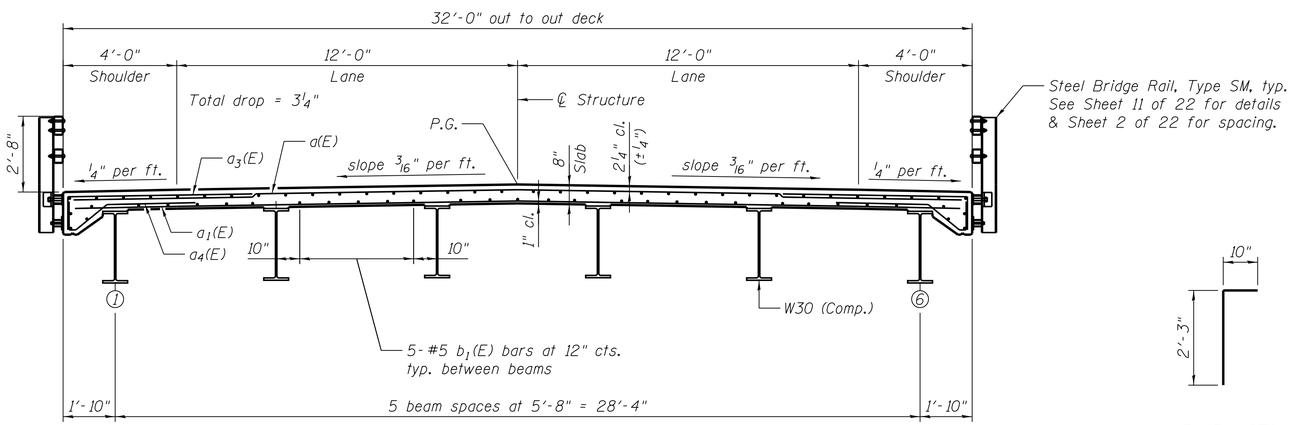

CROSS SECTION

(Looking North)

BAR v(E)

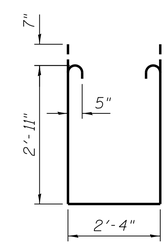

BAR s1(E)

FILE NAME = W:\Projects\2013\13174 WalkerPhil\cadd\Structural\Dgn\0453065-007-Superstructure.dgn

WILLS BURKE KELSEY ASSOCIATES LTD. 116 West Main Street, Suite 201 St. Charles, Illinois 60174	USER NAME = nparris	DESIGNED - JMM	REVISED -	KANE COUNTY DIVISION OF TRANSPORTATION	SUPERSTRUCTURE STRUCTURE NO. 045-3065	C.H. 46	SECTION 08-00133-01-BR
		CHECKED - AEU	REVISED -			COUNTY KANE	TOTAL SHEETS 87
	PLOT SCALE = $SCALE$	DRAWN - JMM	REVISED -			SHEET NO. 44	CONTRACT NO. XXXXX
	PLOT DATE = 9/8/2014	CHECKED - AEU	REVISED -		SHEET NO. 7 OF 22 SHEETS		ILLINOIS FED. AID PROJECT

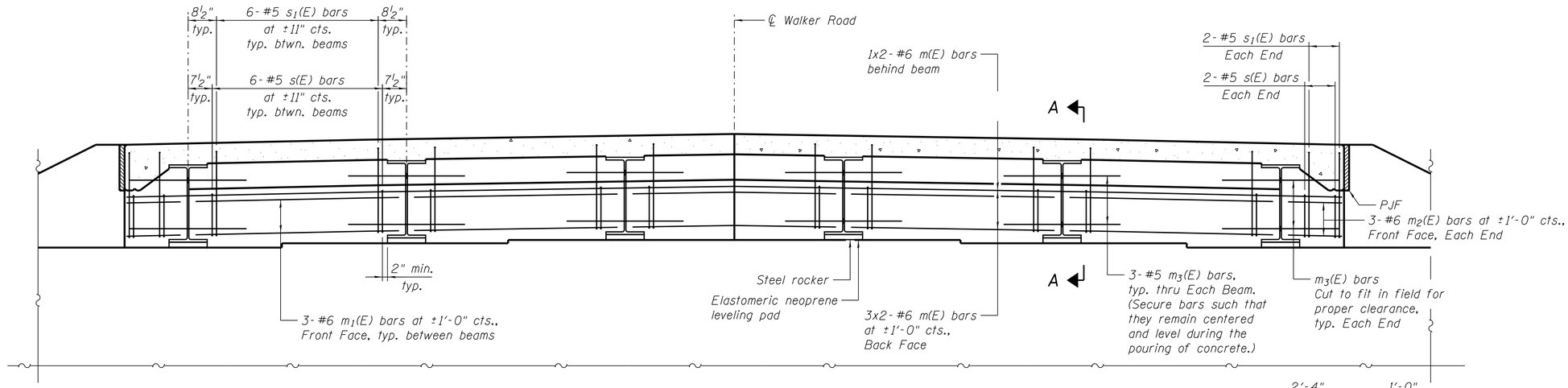

DIAPHRAGM ELEVATION AT ABUTMENT

(Looking north at north abutment)

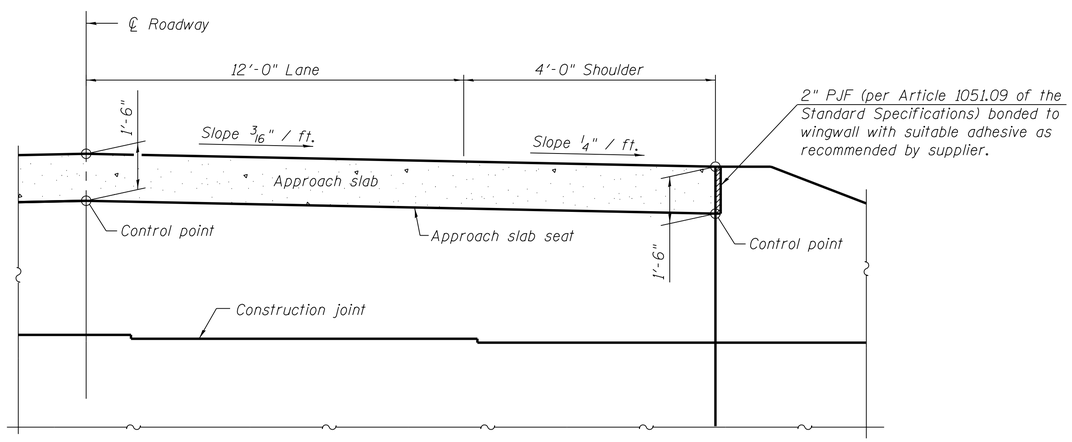

SECTION B-B

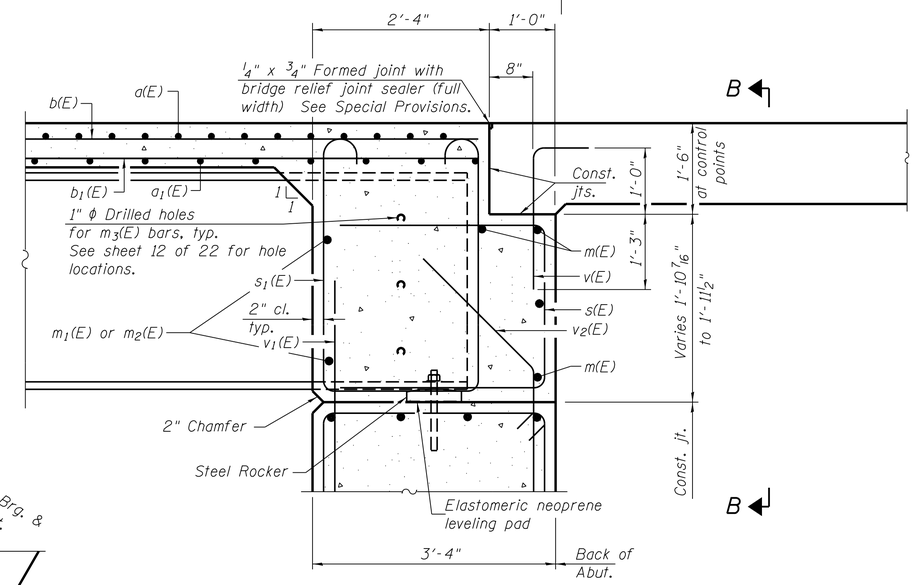

SECTION A-A

(at Rt. L's)

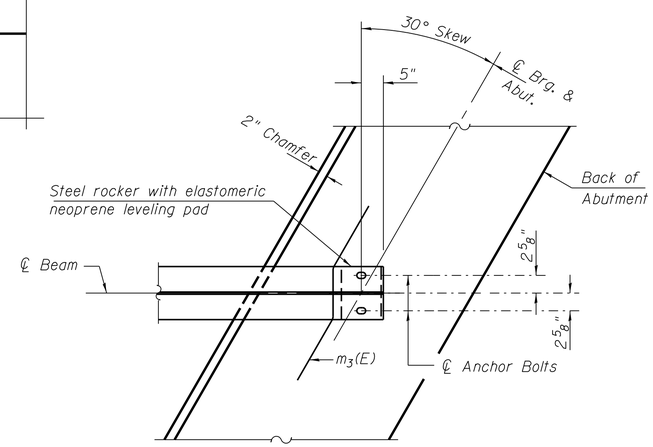

PARTIAL PLAN AT ABUTMENT

(Showing bottom flange of beam)

MIN. BAR LAP

#6 Bar = 3'-1"

Notes:

Reinforcement bars in diaphragm are billed with superstructure on sheet 7 of 22.

Concrete in diaphragm is included with Concrete Superstructure on sheet 7 of 22.

For details of bars s(E), s1(E) and v(E) see sheet 7 of 22.

The s(E) and s1(E) bars shall be placed parallel to the beams. Spacing for these bars shall be at right angles to the beams.

The approach slab seat shall have a constant slope determined from the control points shown.

For bearing details see sheet 13 of 21.

FILE NAME = W:\Projects\2013\130174 WalkerPhil\cadd\Structural\Dgn\0453065-008-SuperDetails.dgn

WILLS BURKE KELSEY ASSOCIATES LTD.
116 West Main Street, Suite 201
St. Charles, Illinois 60174

USER NAME = nparris	DESIGNED - JMM	REVISED -	
	CHECKED - AEU	REVISED -	
PLOT SCALE = $SCALE$	DRAWN - JMM	REVISED -	
PLOT DATE = 9/8/2014	CHECKED - AEU	REVISED -	

KANE COUNTY
DIVISION OF TRANSPORTATION

DIAPHRAGM DETAILS
STRUCTURE NO. 045-3065

SHEET NO. 8 OF 22 SHEETS

C.H.	SECTION	COUNTY	TOTAL SHEETS	SHEET NO.
46	08-00133-01-BR	KANE	87	45
		CONTRACT NO. XXXXX		
		ILLINOIS FED. AID PROJECT		

Notes:
See Sheet 10 of 22 for Sections C-C & D-D
a_5(E) and a_6(E) bar spacings measured along ℄ Rdwy.

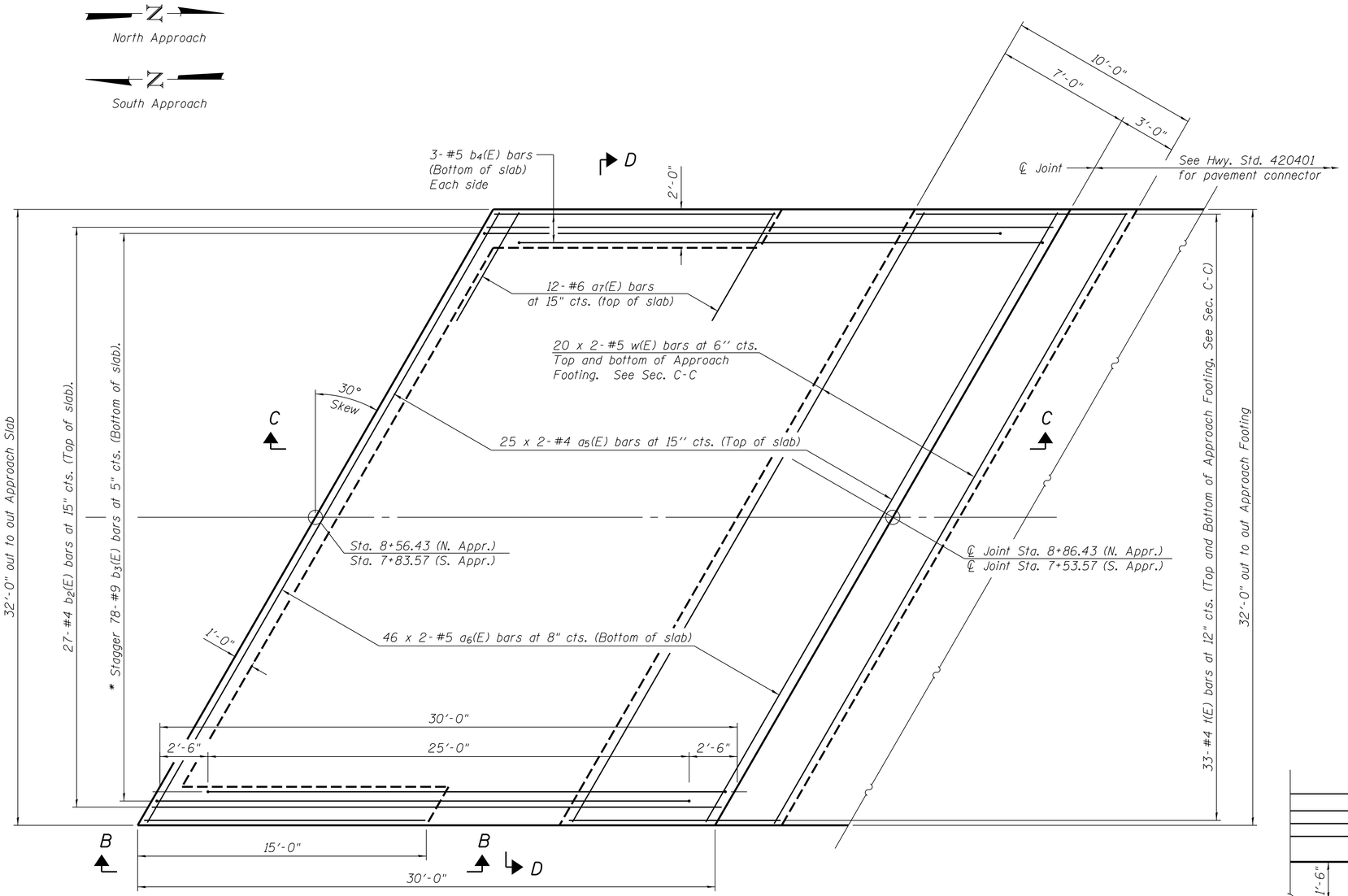

PLAN

* Tilt #9 b_3(E) bars as required to maintain clearance.

MIN. BAR LAP

#4 Bar = 2'-1"
#5 Bar = 2'-7"

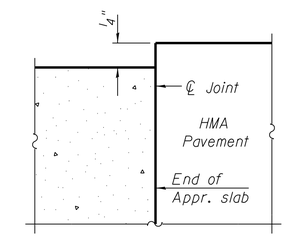

FLEXIBLE PAVEMENT

DETAIL A

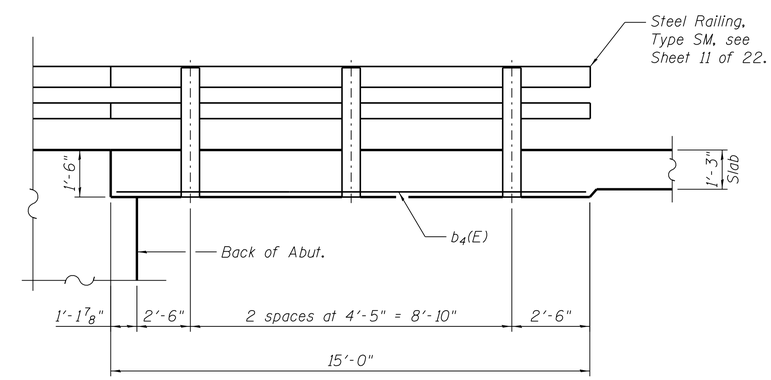

VIEW B-B

(Sheet 1 of 2)

WILLS BURKE KELSEY ASSOCIATES LTD. 116 West Main Street, Suite 201 St. Charles, Illinois 60174	USER NAME = nparris	DESIGNED - JMM	REVISED -	KANE COUNTY DIVISION OF TRANSPORTATION	BRIDGE APPROACH SLAB DETAILS STRUCTURE NO. 045-3065	C.H.	SECTION	COUNTY	TOTAL SHEETS	SHEET NO.
		CHECKED - AEU	REVISED -			46	08-00133-01-BR	KANE	87	46
	PLOT SCALE = $SCALE$	DRAWN - JMM	REVISED -			CONTRACT NO. XXXXX				
	PLOT DATE = 9/8/2014	CHECKED - AEU	REVISED -		SHEET NO. 9 OF 22 SHEETS	ILLINOIS FED. AID PROJECT				

FILE NAME = W:\Projects\2013\130174 WalkerPhil\cadd\Structural\Dgn\045-3065-009-AppSlab1.dgn

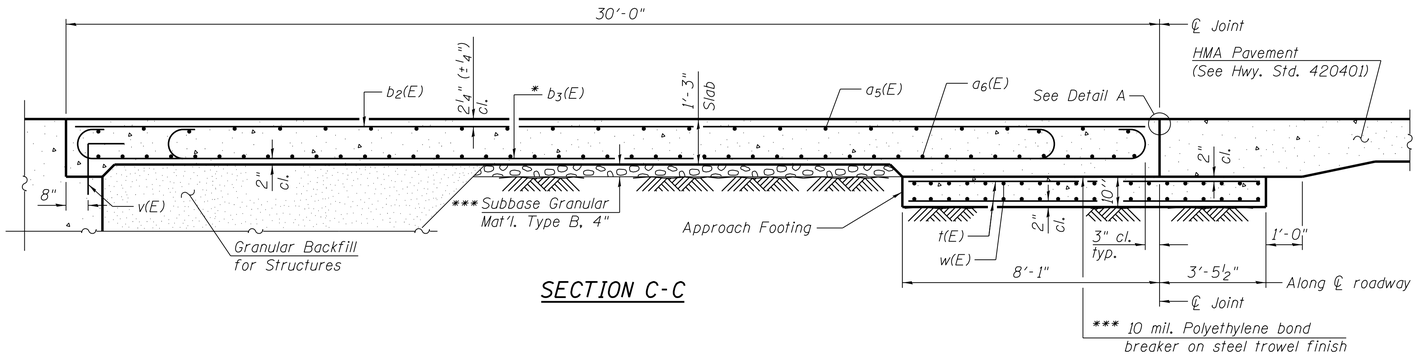

SECTION C-C

Notes:

See Sheet 9 of 22 for Detail A.
Approach slab shall be paid for as Concrete Superstructure.
Approach footing concrete shall be paid for as Concrete Structures.
Reinforcement shall be paid for as Reinforcement Bars, Epoxy Coated.
For v(E) bar details, see Sheet 7 of 22.
The approach footing maximum applied service bearing pressure (Qmax) = 2.0 ksf.
Cost of excavation for approach footing included with Concrete Structures.
For Granular Backfill for Structures and drainage treatment details, see Sheet 2 of 22.

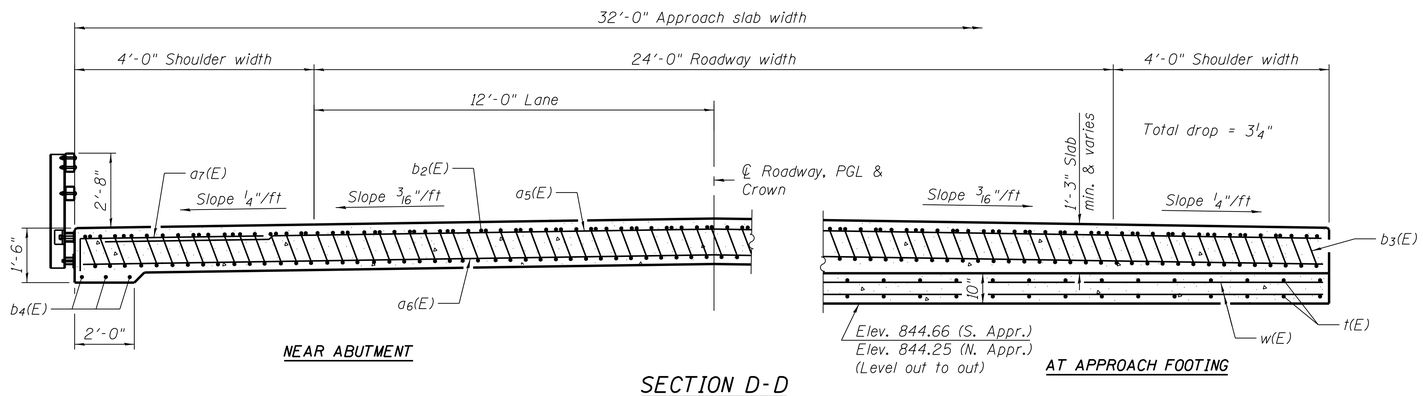

NEAR ABUTMENT

AT APPROACH FOOTING

SECTION D-D

(See Plan for dimensions not shown)

* Tilt #9 b3(E) bars as required to maintain clearance.

*** Cost included with Concrete Superstructure.

TWO APPROACHES BILL OF MATERIAL

Bar	No.	Size	Length	Shape
a5(E)	100	#4	19'-5"	
a6(E)	184	#5	19'-8"	
a7(E)	48	#6	7'-6"	
b2(E)	54	#4	29'-8"	
b3(E)	156	#9	29'-9"	
b4(E)	12	#5	14'-8"	
t(E)	132	#4	11'-2"	
w(E)	160	#5	19'-8"	
Concrete Superstructure			Cu. Yd.	98.7
Concrete Structures			Cu. Yd.	19.8
Bridge Deck Grooving			Sq. Yd.	214
Protective Coat			Sq. Yd.	214
Reinforcement Bars, Epoxy Coated			Pound	26,910

Bars indicated thus 46 x 2-#5 etc. indicates 46 lines of bars with 2 lengths per line.

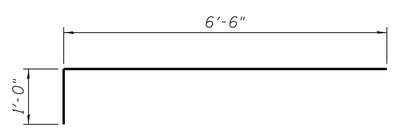

BAR a7(E)

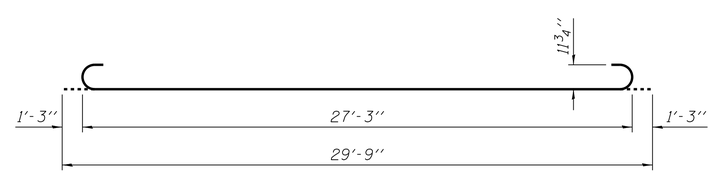

BAR b3(E)

(Sheet 2 of 2)

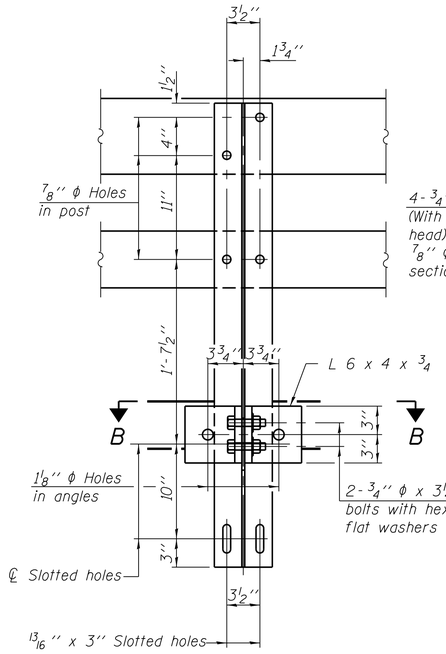

SECTION A-A

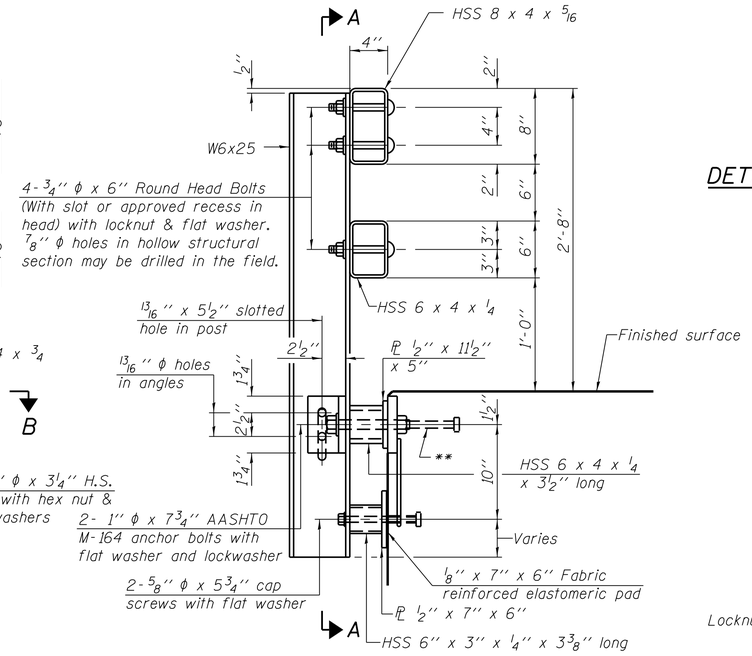

SECTION AT RAIL POST

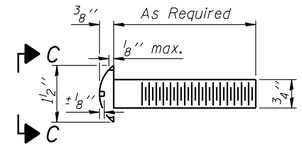

DETAIL OF 3/4'' ϕ ROUND HEAD BOLT

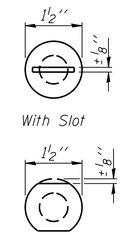

VIEW C-C

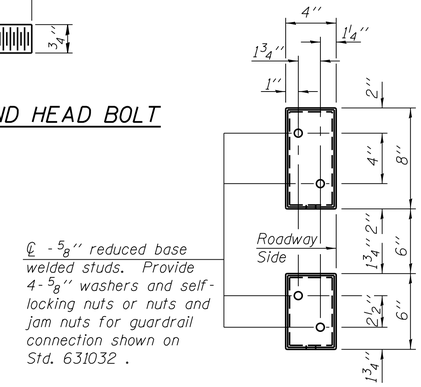

VIEW D-D

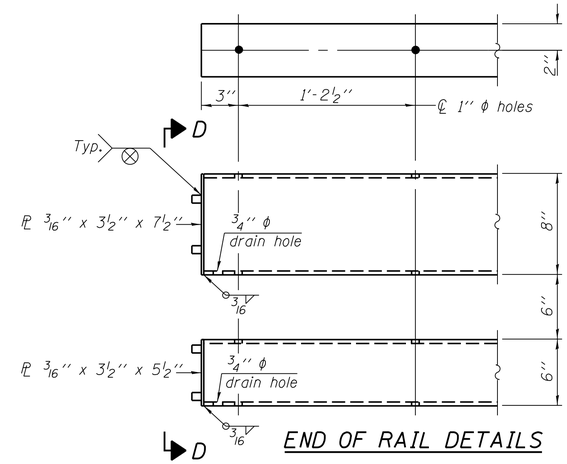

END OF RAIL DETAILS

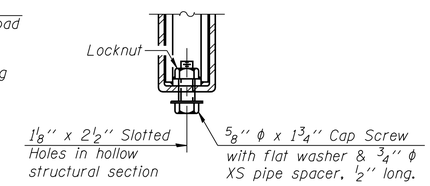

RAIL SPLICE CONNECTION AT EXPANSION JT.

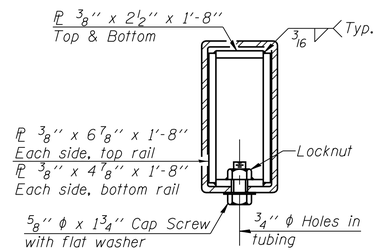

SECTION AT RAIL SPLICE

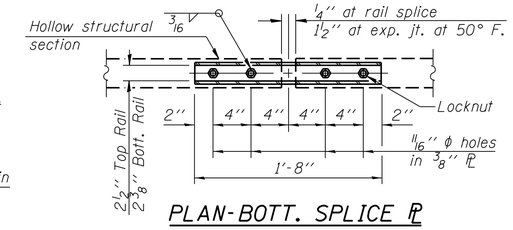

PLAN-BOTT. SPLICE PL TYPICAL

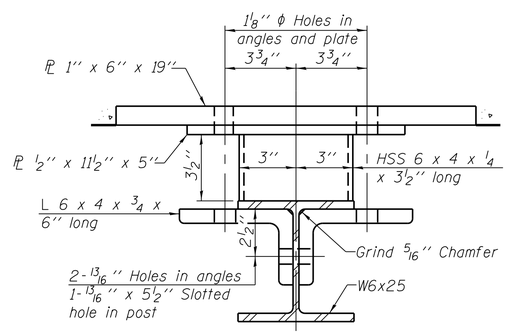

SECTION B-B

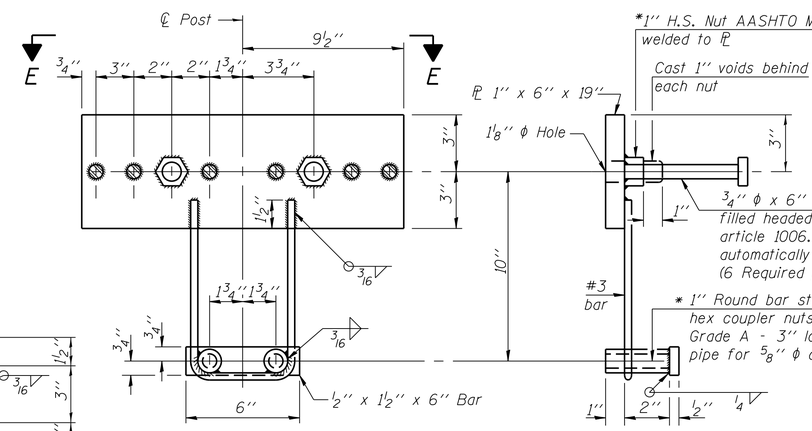

ANCHOR DEVICE

*Threaded areas shall be plugged or blocked off during casting of beam. Galvanized after fabrication.

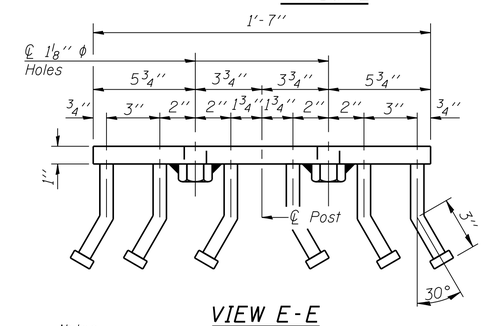

VIEW E-E

Notes:

All field drilled holes shall be coated with an approved zinc rich paint before erection.

For multi-span bridges, sufficient 1/4'' x 6'' x 1'-2'' galvanized steel shims shall be provided to align rail between adjacent spans. Cost included with Steel Railing, Type SM.

Steel rail elements shall be galvanized according to Article 509.05 of the Standard Specifications.

** The studs of the anchor devices shall be placed below the top reinforcement bars and the outermost longitudinal reinforcement bar shall be placed directly above the studs of the rail post anchor device.

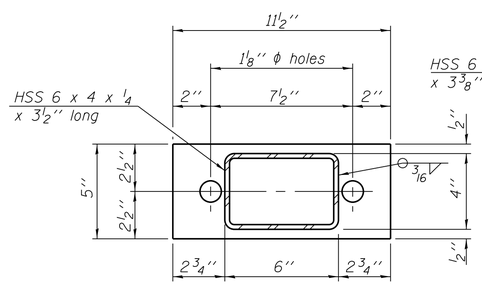

PL 1/2'' x 11 1/2'' x 5''

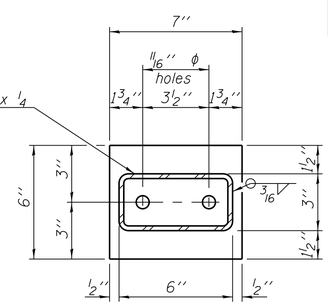

PL 1/2'' x 7'' x 6''

(6'-3'' Maximum Post Spacing)

BILL OF MATERIAL

Item	Unit	Quantity
Steel Railing, Type SM	Foot	206

FILE NAME = W:\Projects\2013\13017A WalkerPhil\cadd\Structural\Dgn\045-3065-011-Railing.dgn

WILLS BURKE KELSEY ASSOCIATES LTD.
116 West Main Street, Suite 201
St. Charles, Illinois 60174

USER NAME = nparris	DESIGNED - JMM	REVISED -	
	CHECKED - AEU	REVISED -	
PLOT SCALE = $SCALE$	DRAWN - JMM	REVISED -	
PLOT DATE = 9/8/2014	CHECKED - AEU	REVISED -	

KANE COUNTY
DIVISION OF TRANSPORTATION

STEEL RAILING, TYPE SM
STRUCTURE NO. 045-3065

SHEET NO. 11 OF 22 SHEETS

C.H.	SECTION	COUNTY	TOTAL SHEETS	SHEET NO.
46	08-00133-01-BR	KANE	87	48
		CONTRACT NO. XXXXX		
		ILLINOIS FED. AID PROJECT		

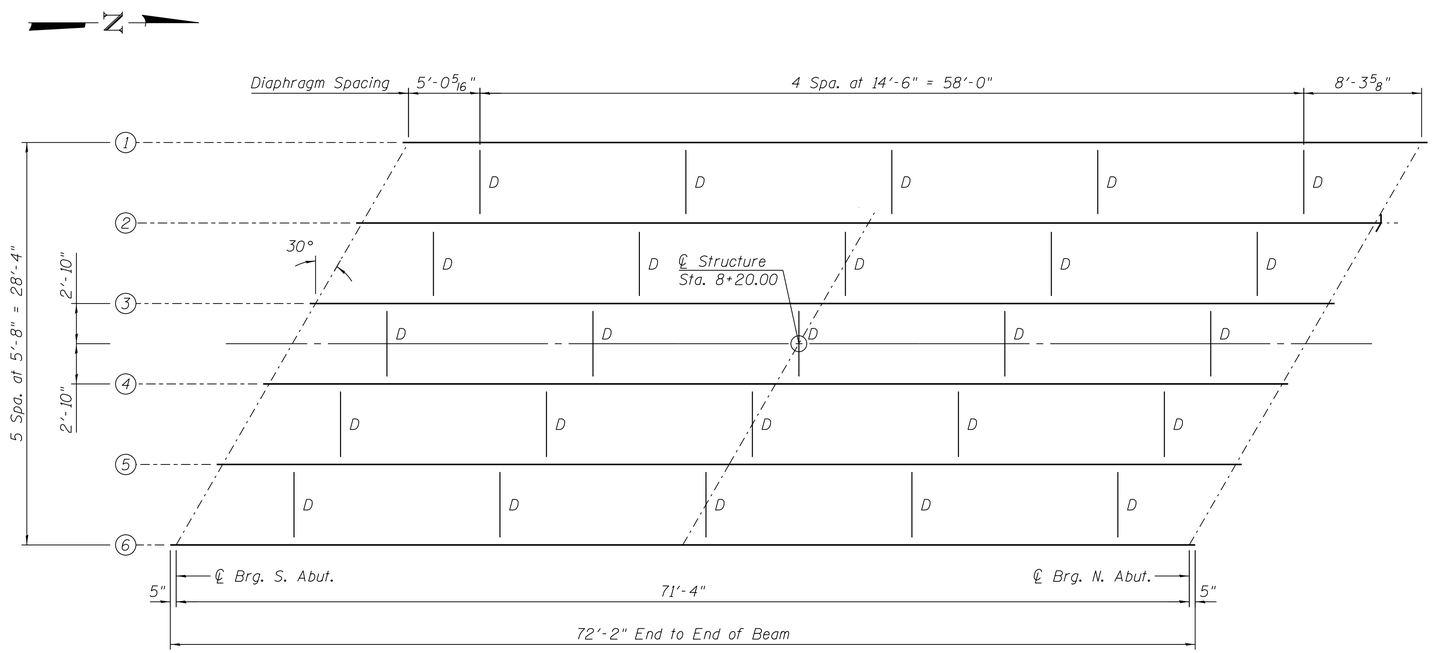

FRAMING PLAN

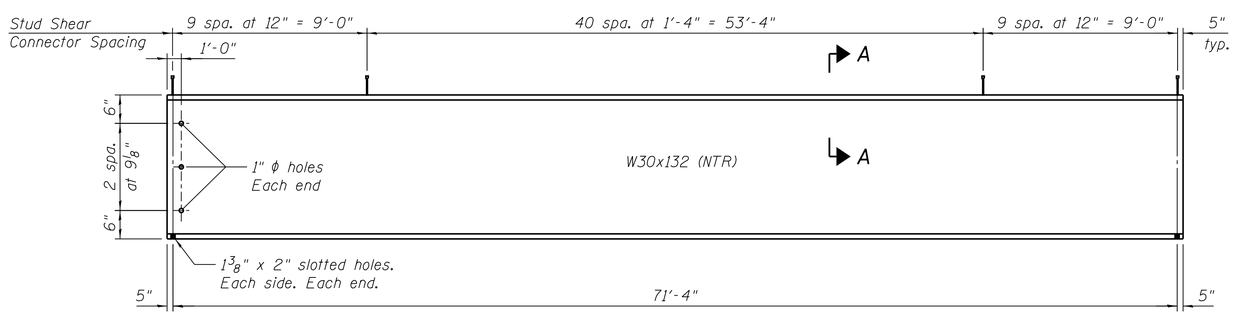

ELEVATION

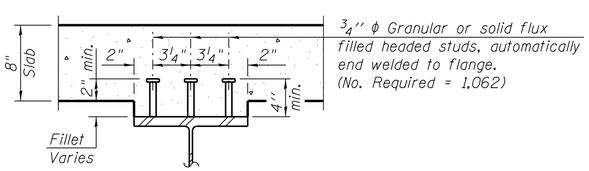

SECTION A-A

TOP OF BEAM ELEVATIONS

(For Fabrication Only)

Location	Beam 1	Beam 2	Beam 3	Beam 4	Beam 5	Beam 6
℄ Brg. S. Abut.	846.08	846.18	846.28	846.28	846.19	846.09
℄ Brg. N. Abut.	845.85	845.97	846.08	846.09	846.02	845.93

INTERIOR GIRDER MOMENT TABLE		
		0.5 Sp. 1
I_s	(in^4)	5770
$I_c(n)$	(in^4)	15,692
$I_c(3n)$	(in^4)	11,611
$I_c(cr)$	(in^4)	-
S_s	(in^3)	380
$S_c(n)$	(in^3)	562
$S_c(3n)$	(in^3)	509
$S_c(cr)$	(in^3)	-
DC1	(k/')	0.725
M_{DC1}	('k)	453
DC2	(k/')	0.033
M_{DC2}	('k)	21.0
DW	(k/')	0.28
M_{DW}	('k)	175.0
M_{LL+IM}	('k)	915.0
M_u (Strength I)	('k)	2456
$\phi_f M_n$	('k)	3207
f_s DC1	(ksi)	14.31
f_s DC2	(ksi)	0.49
f_s DW	(ksi)	4.13
f_s (LL+IM)	(ksi)	21.57
f_s (Service II)	(ksi)	46.97
$0.95R_hF_{yf}$	(ksi)	47.5
f_s (Total)(Strength I)	(ksi)	-
$\phi_f F_n$	(ksi)	15.2
V_f	(k)	15.2

INTERIOR GIRDER REACTION TABLE		
		Abut.
R_{DC1}	(k)	25.9
R_{DC2}	(k)	1.2
R_{DW}	(k)	10.0
R_{LL+IM}	(k)	75.9
R_{Total}	(k)	113

I_s, S_s: Non-composite moment of inertia and section modulus of the steel section used for computing f_s (Total-Strength I, and Service II) due to non-composite dead loads ($in.^4$ and $in.^3$).

$I_c(n)$, $S_c(n)$: Composite moment of inertia and section modulus of the steel and deck based upon the modular ratio, "n", used for computing f_s (Total-Strength I, and Service II) in uncracked sections, due to short-term composite live loads ($in.^4$ and $in.^3$).

$I_c(3n)$, $S_c(3n)$: Composite moment of inertia and section modulus of the steel and deck based upon 3 times the modular ratio, "3n", used for computing f_s (Total-Strength I, and Service II) in uncracked sections, due to long-term composite (superimposed) dead loads ($in.^4$ and $in.^3$).

$I_c(cr)$, $S_c(cr)$: Composite moment of inertia and section modulus of the steel and longitudinal deck reinforcement, used for computing f_s (Total-Strength I and Service II) in cracked sections, due to both short-term composite live loads and long-term composite dead loads ($in.^4$ and $in.^3$).

DC1: Un-factored non-composite dead load (kips/ft.).

M_{DC1}: Un-factored moment due to non-composite dead load (kip-ft.).

DC2: Un-factored long-term composite (superimposed excluding future wearing surface) dead load (kips/ft.).

M_{DC2}: Un-factored moment due to long-term composite (superimposed excluding future wearing surface) dead load (kip-ft.).

DW: Un-factored long-term composite (superimposed future wearing surface only) dead load (kips/ft.).

M_{DW}: Un-factored moment due to long-term composite (superimposed future wearing surface only) dead load (kip-ft.).

M_{LL+IM}: Un-factored live load moment plus dynamic load allowance (impact) ((kip-ft.).

M_u (Strength I): Factored design moment (kip-ft.).
$1.25\ (M_{DC1} + M_{DC2}) + 1.5\ M_{DW} + 1.75\ M_{LL+IM}$

$\phi_f M_n$: Compact composite positive moment capacity computed according to Article 6.10.7.1 (kip-ft.).

f_s DC1: Un-factored stress at edge of flange for controlling steel flange due to vertical non-composite dead loads as calculated below (ksi).
M_{DC1} / S_{nc}

f_s DC2: Un-factored stress at edge of flange for controlling steel flange due to vertical composite dead loads as calculated below (ksi).
$M_{DC2} / S_c(3n)$ or $M_{DC2} / S_c(cr)$ as applicable.

f_s DW: Un-factored stress at edge of flange for controlling steel flange due to vertical composite future wearing surface loads as calculated below (ksi).
$M_{DW} / S_c(3n)$ or $M_{DW} / S_c(cr)$ as applicable.

f_s (LL+IM): Un-factored stress at edge of flange for controlling steel flange due to vertical composite live plus impact loads as calculated below (ksi).
$M_{LL+IM} / S_c(3n)$ or $M_{LL+IM} / S_c(cr)$ as applicable.

f_s (Service II): Sum of stresses as computed below (ksi).
$f_{sDC1} + f_{sDC2} + f_{sDW} + 1.3\ f_s(LL+IM)$

$0.95R_hF_{yf}$: Composite stress capacity for Service II loading according to Article 6.10.4.2 (ksi).

f_s (Total)(Strength I): Sum of stresses as computed below on non-compact section (ksi).
$1.25\ (f_{sDC1} + f_{sDC2}) + 1.5\ f_{sDW} + 1.75\ f_{sLL+IM}$

$\phi_f F_n$: Non-Compact composite positive or negative stress capacity for Strength I loading according to Article 6.10.7.2 (ksi).

V_f: Maximum factored shear range in composite portion of span computed according to Article 6.10.10.

NOTES:

1. All beams shall be W30x132 AASHTO M270 Grade 50W (NTR). All diaphragms and connecting angles shall be AASHTO M270 Grade 50W. All bearing plates shall be AASHTO M270 Grade 50W.

2. All diaphragms shall be installed as the steel is erected and secured with erection pins and bolts except as otherwise noted.

3. Load carrying components designated "NTR" shall conform to the Supplemental Requirements for Notch Toughness, Zone 2.

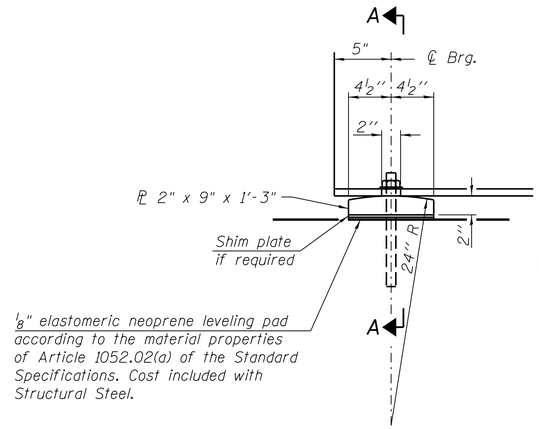

ELEVATION AT ABUTMENT

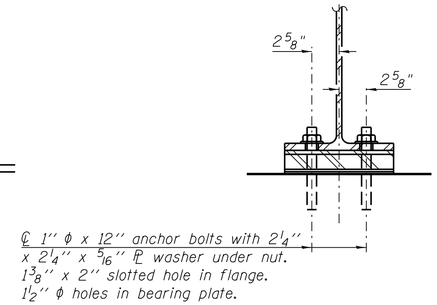

SECTION A-A

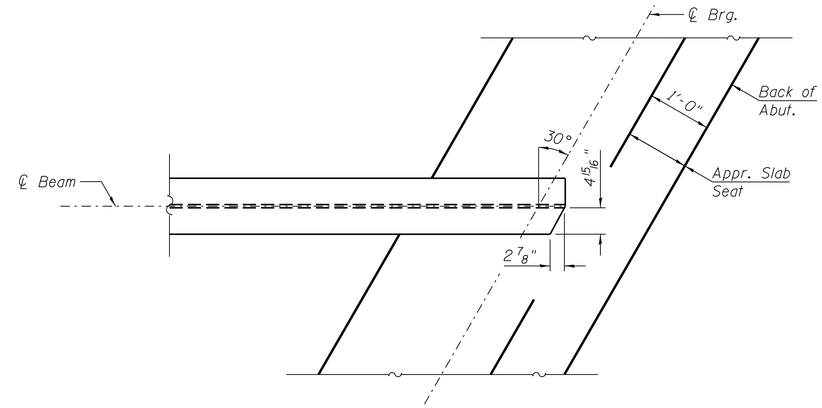

TOP FLANGE PLAN - CLIPPED

FIXED BEARING

(12 Required)

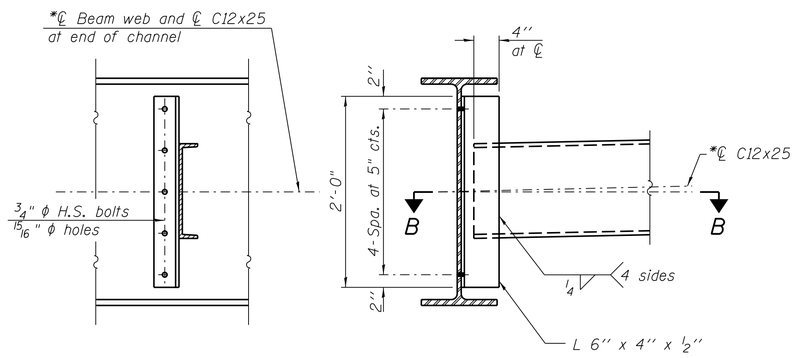

INTERIOR DIAPHRAGM, D

(25 Required)

Note:
Two hardened washers required for each set of oversized holes.
*C12x30 is permitted to facilitate material acquisition. Calculated weight of structural steel is based on the lighter section.
The alternate, if utilized, shall be provided at no additional cost to the Owner.

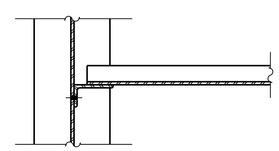

SECTION B-B

NOTES:

1. Anchor bolts shall be ASTM F1554 all-thread (or an Engineer-approved alternate material) of the grade(s) and diameter(s) specified. The corresponding specified grade of AASHTO M314 anchor bolts may be used in lieu of ASTM F1554.
2. Anchor bolts at fixed bearings may be either cast in place or installed in holes drilled after the supported member is in place.
3. Drilled and set anchor bolts shall be installed according to Article 521.06 of the Standard Specifications.
4. Two 1/8 in. adjusting shims shall be provided for each bearing location in addition to all other plates and shims and placed as shown on the bearing details.

BILL OF MATERIAL

Item	Unit	Total
Anchor Bolts, 1"	Each	24

FILE NAME = W:\Projects\2013\130174 WalkerPhil\cadd\Structural\Dgn\8453065-013-StructuralSteelDtls.dgn

WILLS BURKE KELSEY ASSOCIATES LTD.
116 West Main Street, Suite 201
St. Charles, Illinois 60174

USER NAME = nparris	DESIGNED - JMM	REVISED -	
	CHECKED - AEU	REVISED -	
PLOT SCALE = $SCALE$	DRAWN - JMM	REVISED -	
PLOT DATE = 9/8/2014	CHECKED - AEU	REVISED -	

KANE COUNTY
DIVISION OF TRANSPORTATION

STRUCTURAL STEEL DETAILS
STRUCTURE NO. 045-3065

SHEET NO. 13 OF 22 SHEETS

C.H.	SECTION	COUNTY	TOTAL SHEETS	SHEET NO.
46	08-00133-01-BR	KANE	87	50
		CONTRACT NO. XXXXX		
		ILLINOIS FED. AID PROJECT		

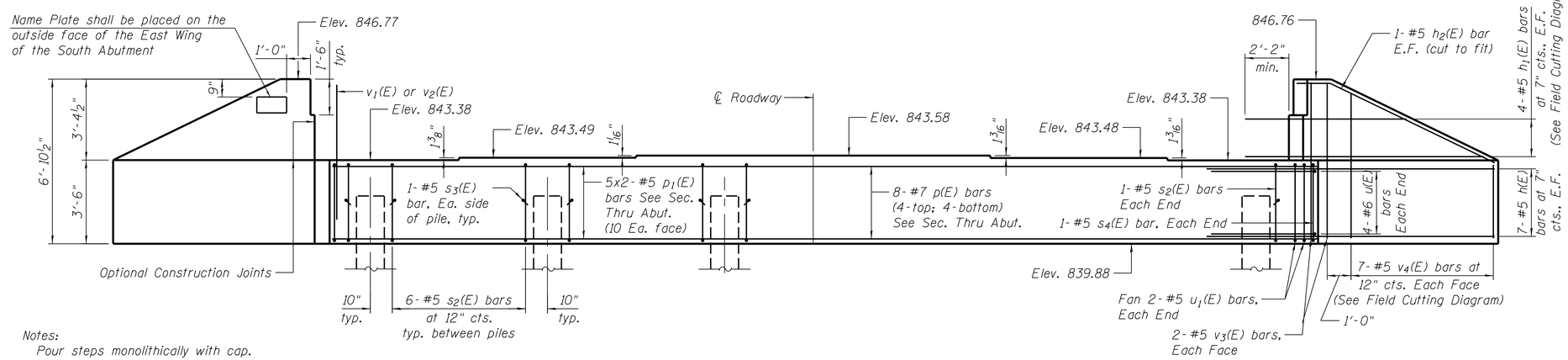

Notes:
Pour steps monolithically with cap.
Space reinforcement in cap to miss Anchor Bolts.

ELEVATION

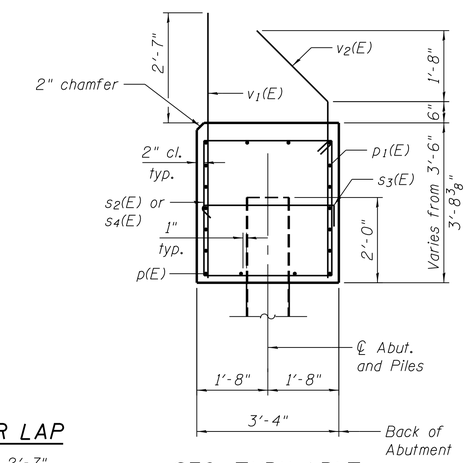

SEC. THRU ABUT.

Dimensions at right angles to abutment.

MIN. BAR LAP

#5 Bar = 2'-7"

PILE DATA

Type: Metal Shell 14" x 0.250"
Nominal Required Bearing: 355 kips
Factored Resistance Available: 195 kips
Est. Length: 55'
No. Production Piles: 5
No. Test Piles: 1

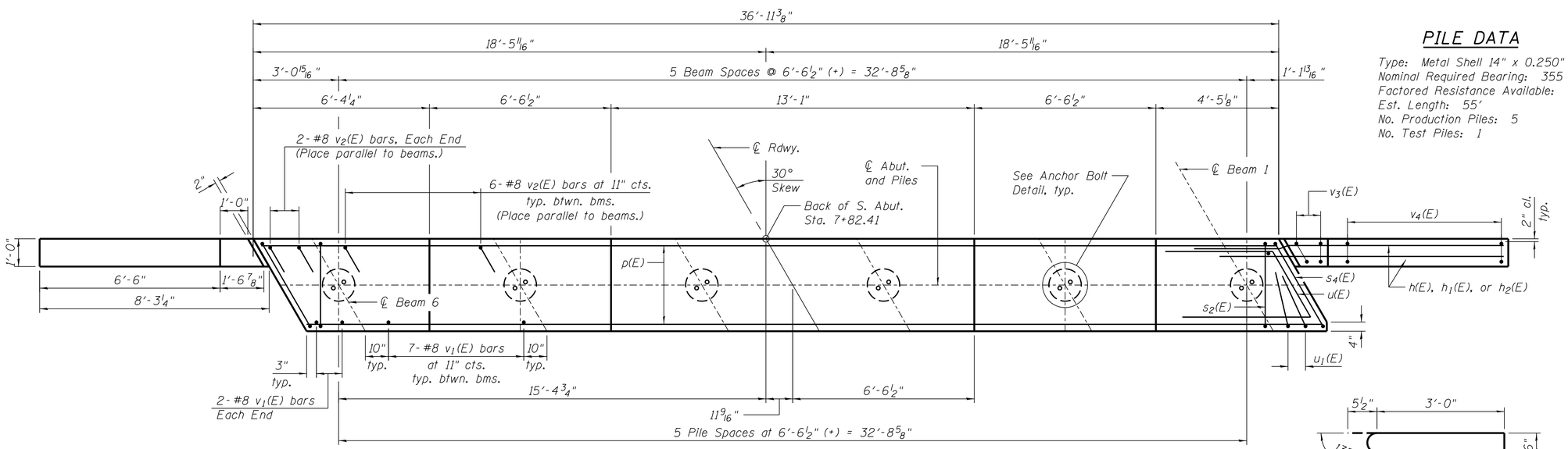

PLAN

BILL OF MATERIAL

Bar	No.	Size	Length	Shape
h(E)	28	#5	12'-0"	
h_1(E)	8	#5	16'-8"	
h_2(E)	4	#5	7'-10"	
p(E)	16	#7	36'-7"	
p_1(E)	40	#5	19'-7"	
s_2(E)	32	#5	13'-3"	
s_3(E)	12	#5	4'-0"	
s_4(E)	2	#5	14'-3"	
u(E)	8	#6	12'-1"	
u_1(E)	4	#5	8'-2"	
v_1(E)	39	#8	5'-11"	
v_2(E)	34	#8	6'-2"	
v_3(E)	8	#5	6'-6"	
v_4(E)	14	#5	9'-3"	
Structure Excavation		Cu. Yd.	38.0	
Concrete Structures		Cu. Yd.	19.7	
Reinforcement Bars, Epoxy Coated		Pound	4,600	
Furnishing Metal Shell Piles 14"x0.250"		Foot	275	
Test Pile Metal Shells		Each	1	
Driving Piles		Foot	275	

Bars indicated thus 5x2- #5 etc. indicates 5 lines of bars with 2 lengths per line.
For details of piles see sheet 16 of 22.
For details of Integral Abutment Bearing, see sheet 13 of 22.
For drainage details, see Section Thru Integral Abutment on sheet 2 of 22.

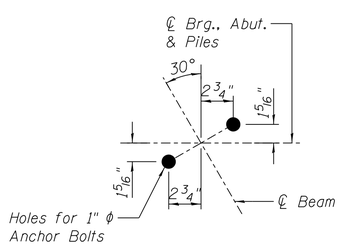

ANCHOR BOLT DETAIL

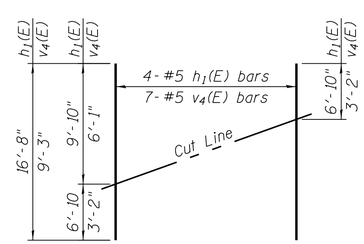

FIELD CUTTING DIAGRAM

Order h_1(E) and v_4(E) full length. Cut as shown and use remainder of bars in opposite face.

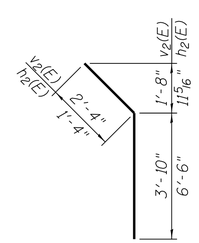

BARS v_2(E) & h_2(E)

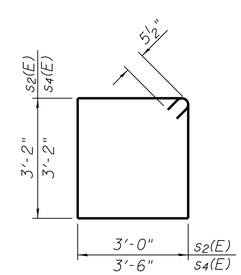

BARS s_2(E) & s_4(E)

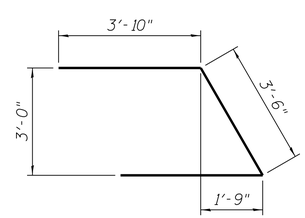

BAR u(E)

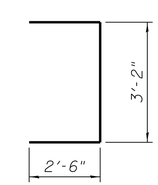

BAR u_1(E)

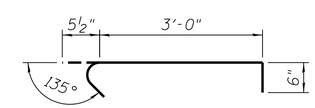

BAR s_3(E)

FILE NAME = W:\Projects\2013\130174 KelkerPhil\cadd\Structure1\Dgn\0453065-014-SouthAbutment.dgn

WILLS BURKE KELSEY ASSOCIATES LTD. 116 West Main Street, Suite 201 St. Charles, Illinois 60174	USER NAME = nparris	DESIGNED - JMM	REVISED -
		CHECKED - AEU	REVISED -
	PLOT SCALE = $SCALE$	DRAWN - JMM	REVISED -
	PLOT DATE = 9/8/2014	CHECKED - AEU	REVISED -

KANE COUNTY
DIVISION OF TRANSPORTATION

SOUTH ABUTMENT
STRUCTURE NO. 045-3065

SHEET NO. 14 OF 22 SHEETS

C.H.	SECTION	COUNTY	TOTAL SHEETS	SHEET NO.
46	08-00133-01-BR	KANE	87	51

CONTRACT NO. XXXXX

ILLINOIS FED. AID PROJECT

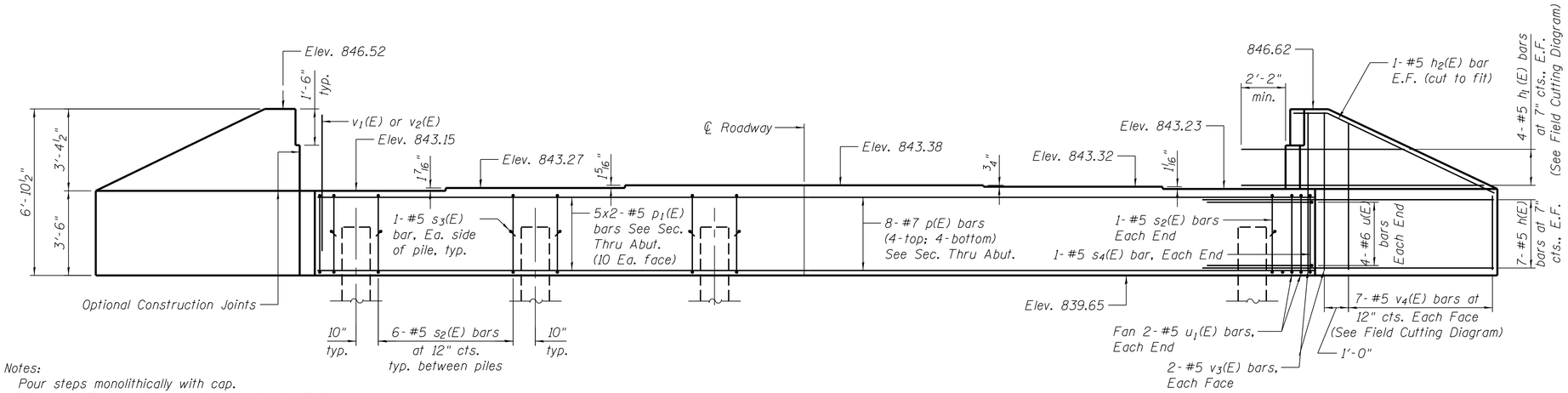

Notes:
Pour steps monolithically with cap.
Space reinforcement in cap to miss Anchor Bolts.

ELEVATION

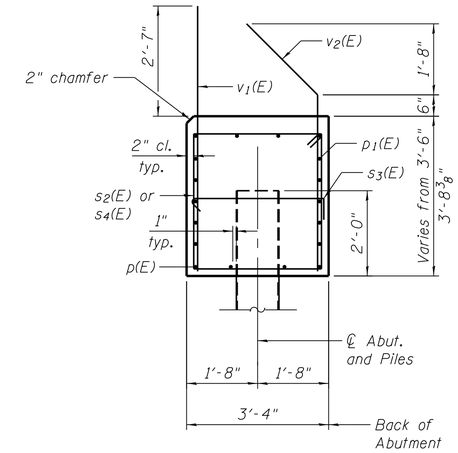

MIN. BAR LAP

#5 Bar = 2'-7"

SEC. THRU ABUT.

Dimensions at right angles to abutment.

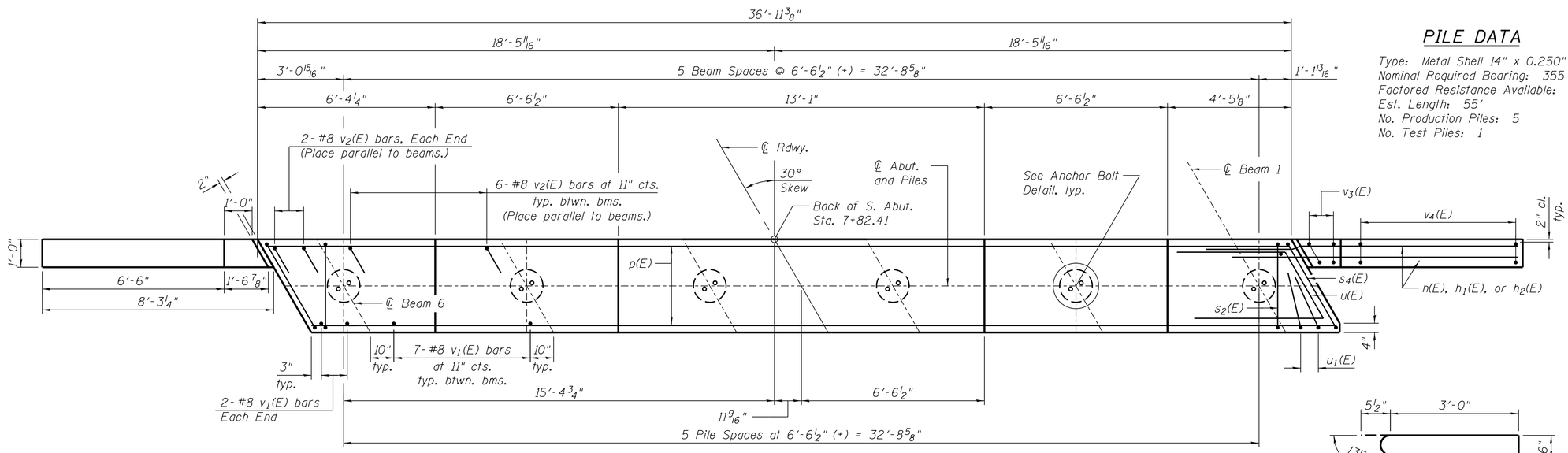

PLAN

PILE DATA

Type: Metal Shell 14" x 0.250"
Nominal Required Bearing: 355 kips
Factored Resistance Available: 195 kips
Est. Length: 55'
No. Production Piles: 5
No. Test Piles: 1

BILL OF MATERIAL

Bar	No.	Size	Length	Shape
h(E)	28	#5	12'-0"	
h_1(E)	8	#5	16'-8"	
h_2(E)	4	#5	7'-10"	
p(E)	16	#7	36'-7"	
p_1(E)	40	#5	19'-7"	
s_2(E)	32	#5	13'-3"	
s_3(E)	12	#5	4'-0"	
s_4(E)	2	#5	14'-3"	
u(E)	8	#6	12'-1"	
u_1(E)	4	#5	8'-2"	
v_1(E)	39	#8	5'-11"	
v_2(E)	34	#8	6'-2"	
v_3(E)	8	#5	6'-6"	
v_4(E)	14	#5	9'-3"	
Structure Excavation			Cu. Yd.	37.0
Concrete Structures			Cu. Yd.	19.9
Reinforcement Bars, Epoxy Coated			Pound	4,600
Furnishing Metal Shell Piles 14"x0.250"			Foot	250
Test Pile Metal Shells			Each	1
Driving Piles			Foot	250

Bars indicated thus 5x2- #5 etc. indicates 5 lines of bars with 2 lengths per line.
For details of piles see sheet 16 of 22.
For details of Integral Abutment Bearing, see sheet 13 of 22.
For drainage details, see Section Thru Integral Abutment on sheet 2 of 22.

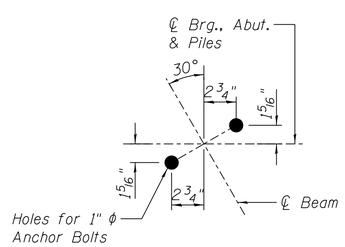

ANCHOR BOLT DETAIL

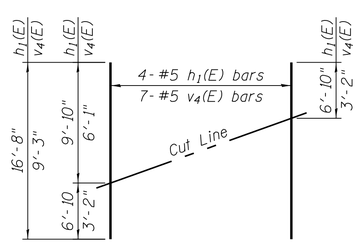

FIELD CUTTING DIAGRAM

Order h_1(E) and v_4(E) full length. Cut as shown and use remainder of bars in opposite face.

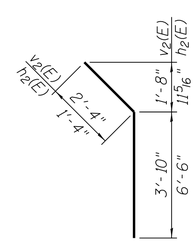

BARS v_2(E) & h_2(E)

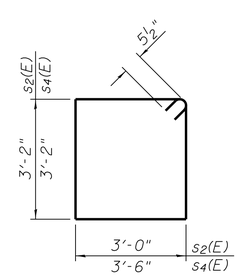

BARS s_2(E) & s_4(E)

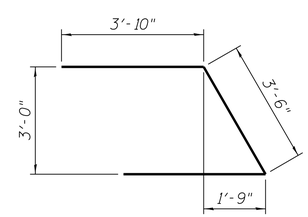

BAR u(E)

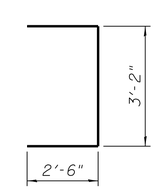

BAR u_1(E)

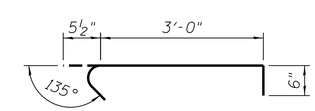

BAR s_3(E)

WILLS BURKE KELSEY ASSOCIATES LTD.
116 West Main Street, Suite 201
St. Charles, Illinois 60174

USER NAME = nparris	DESIGNED - JMM	REVISED -	
	CHECKED - AEU	REVISED -	
PLOT SCALE = $SCALE$	DRAWN - JMM	REVISED -	
PLOT DATE = 9/8/2014	CHECKED - AEU	REVISED -	

KANE COUNTY
DIVISION OF TRANSPORTATION

NORTH ABUTMENT
STRUCTURE NO. 045-3065

SHEET NO. 15 OF 22 SHEETS

C.H.	SECTION	COUNTY	TOTAL SHEETS	SHEET NO.
46	08-00133-01-BR	KANE	87	52
		CONTRACT NO. XXXXX		
		ILLINOIS FED. AID PROJECT		

FILE NAME = W:\Projects\2013\13017 4 WalkerPhil\cadd\Structural\Dgn\0453065-015-NorthAbutment.dgn

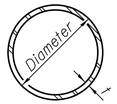

METAL SHELL PILE TABLE

Designation and outside diameter	Wall thickness t	Weight per foot (Lbs./ft.)	Inside volume (yd.^{3}/ft.)
PP12	0.179''	22.60	0.0274
PP12	0.250''	31.37	0.0267
PP14	0.250''	36.71	0.0368
PP14	0.312''	45.61	0.0361

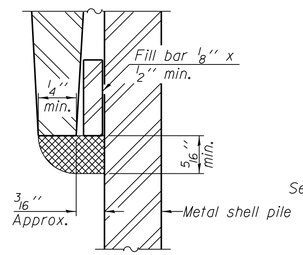

DETAIL A

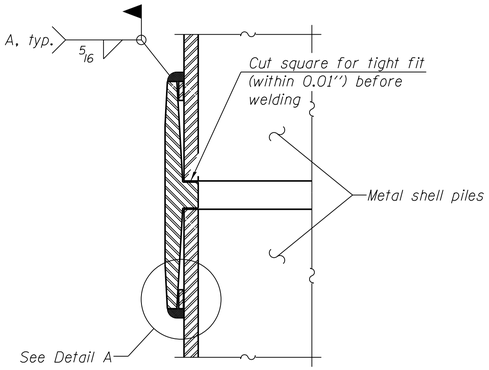

Notes:
The 1/8'' x 1/2'' min. fill bar may be constructed of 2 bars with a 1/8'' max. gap between them.
Pile segments shall be driven to solid contact with splicer before welding.

WELDED COMMERCIAL SPLICE

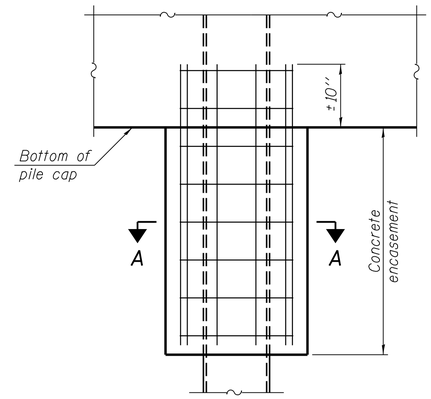

ELEVATION

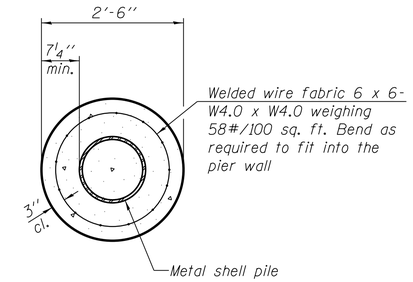

SECTION A-A

Note:
Forms for encasement may be omitted when soil conditions permit.

CONCRETE ENCASEMENT AT PIERS

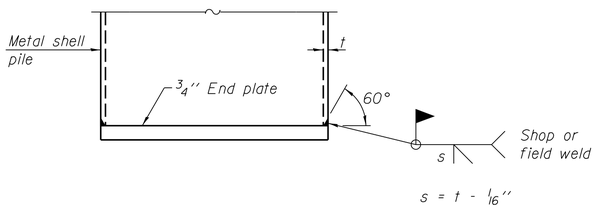

END PLATE ATTACHMENT

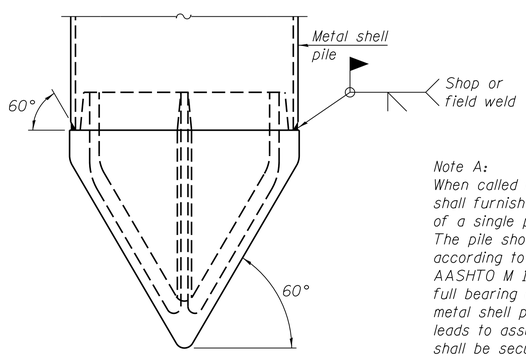

Note A:
When called for on the plans, the Contractor shall furnish metal shell pile shoes consisting of a single piece conical pile point as shown. The pile shoes shall be cast in one piece steel according to either ASTM A 148 Grade 90-60 or AASHTO M 103 Grade 65-35 and shall provide full bearing over the full circumference of the metal shell pile. The pile shoe shall have tapered leads to assure proper alignment and fitting and shall be secured to the pile with a circumferential weld.

METAL SHELL PILE SHOE ATTACHMENT

(See Note A)

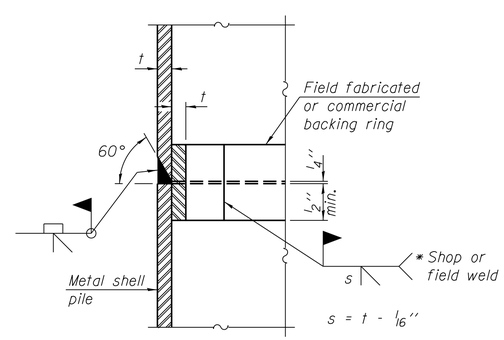

COMPLETE PENETRATION WELD SPLICE

* Field fabricated backing ring may be made from pile shell by removing segment to allow reducing circumference and vertically rejoin with partial joint penetration weld.

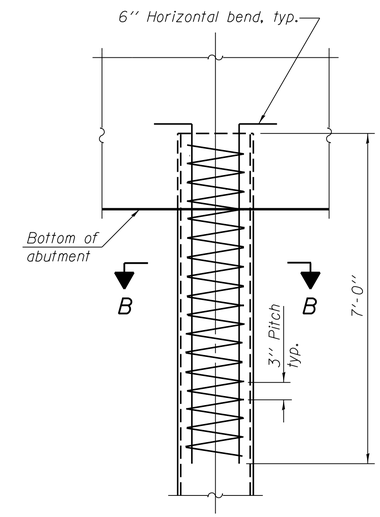

ELEVATION

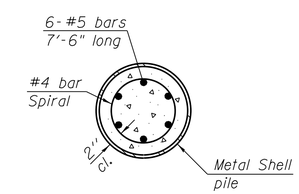

SECTION B-B

METAL SHELL REINFORCEMENT AT ABUTMENTS

Note:
The metal shell piles shall be according to ASTM A 252 Grade 3.

F-MS 1-27-12

FILE NAME = W:\Projects\2013\130174 Walker-Phil\cadd\Structural\Dgn\0453065-016-MSPileDtls.dgn

WILLS BURKE KELSEY ASSOCIATES LTD.
116 West Main Street, Suite 201
St. Charles, Illinois 60174

USER NAME = nparris	DESIGNED - JMM	REVISED -	
	CHECKED - AEU	REVISED -	
PLOT SCALE = $SCALE$	DRAWN - JMM	REVISED -	
PLOT DATE = 9/8/2014	CHECKED - AEU	REVISED -	

KANE COUNTY
DIVISION OF TRANSPORTATION

METAL SHELL PILE DETAILS
STRUCTURE NO. 045-3065
SHEET NO. 16 OF 22 SHEETS

C.H.	SECTION	COUNTY	TOTAL SHEETS	SHEET NO.
46	08-00133-01-BR	KANE	87	53
		CONTRACT NO. XXXXX		
	ILLINOIS FED. AID PROJECT			

Testing Service Corporation

STRUCTURE BORING LOG

Date Started 7/26/10
Date Completed 7/26/10

ROUTE CH46 DESCRIPTION Walker Road over Burlington Creek

SECT. 08-00133-01-BR STRUCT. NO. 045-3036 DRILLED BY TSC L-75,422

COUNTY Kane LOCATION W. End North Abutment S. 19NE/20NW , TWP. 42N , RNG. 6E

Boring No. S-1
Station 8+57
Offset 7.22ft LT
Surface Elev. 842.90 ft

Surface Water Elev.
Groundwater Elev.:
when drilling 837.9
at Completion 832.9
after Hrs.

Description	Elev.	DEPTH	BLOWS	Qu tsf	W %
11½" Bituminous Concrete	841.90				
FILL - Dark brown and brown SAND and GRAVEL, moist A-1-b	839.90		5 8 7		
FILL - Black, brown and gray CLAY, trace organic and wood, very moist A-7-6		-5	7 2 1	P 1.0	47.6
			5 3 2	P 1.25	43.3
Medium dense brown and gray SAND, trace gravel, saturated A-1-b	833.90	-10	1 6 7	P 0.75	29.8 13.3
			7 8 8		14.4
		-15	4 6 7		11.8
			5 7 8		10.6
Medium dense gray fine to medium SAND, saturated A-3	824.90	-20	4 6 9		18.9
			4 7 11		11.8
		-25	7 10 10		19.7
Medium dense gray SILT, little sand, very moist A-4	817.40		5 6 11		18.2
Stiff to very stiff gray LOAM, trace gravel, moist A-4	814.90	-30	4 6 9	P 2.0	10.9
		-35	6 5 7	B 1.3	11.7
		-40	7 9 11	B 3.7	11.4
		-45	8 10 10	P 3.5	10.2
Hard gray CLAY LOAM, moist A-4/A-6	795.90	-50	8 12 16	B 4.1	10.2

SPT. (N) = Sum of last two blow values in sample. (Qu) B=Bulge S=Shear P=Penetration Test
Stations, Depths, Offset, and Elevations are in Feet

ILDOT_BORING 75422.GPJ IDOT.GDT 7.17.12

Testing Service Corporation

STRUCTURE BORING LOG

Date Started 7/26/10
Date Completed 7/26/10

STRUCTURE NO. 045-3036
ROUTE CH46
SECTION 08-00133-01-BR
COUNTY Kane

STRUCTURE NO. 045-3036
ROUTE CH46
SECTION 08-00133-01-BR
COUNTY Kane

Boring No. S-1
Station 8+57
Offset 7.22ft LT
Elevation 792.90 ft

Elevation 767.90 ft

Description	Elev.	DEPTH	BLOWS	Qu tsf	W %
Hard gray CLAY LOAM, moist A-4/A-6		-55	10 12 20	B 7.4	12.9
Very stiff gray CLAY LOAM, moist A-4/A-6	785.90	-60	9 12 12	P 3.0	10.5
		-65	6 10 12	P 3.0	11.0
		-70	7 8 12	B 2.8	14.7
		-75	6 7 9	B 2.7	14.8
Very stiff gray CLAY LOAM, moist A-4/A-6					
Hard gray CLAY LOAM, damp A-4/A-6	764.90		26 22 32	B 6.1	10.4
End of Boring at 80.0'	762.90	-80			
CME 55 on Remote Controlled ATV Carrier (#262) CME Automatic Hammer 3.25" (83 mm) ID HSA		-85			
		-90			
		-95			
		-100			

SPT. (N) = Sum of last two blow values in sample. (Qu) B=Bulge S=Shear P=Penetration Test
Stations, Depths, Offset, and Elevations are in Feet

ILDOT_BORING 75422.GPJ IDOT.GDT 7.17.12

FILE NAME = W:\Projects\2013\13174 WalkerPhil\cadd\Structural\Dgn\0453065-B17-Soil Boring Logs I.dgn

WILLS BURKE KELSEY ASSOCIATES LTD.
116 West Main Street, Suite 201
St. Charles, Illinois 60174

USER NAME = nparris	DESIGNED - JMM	REVISED -
	CHECKED - AEU	REVISED -
PLOT SCALE = $SCALE$	DRAWN - JMM	REVISED -
PLOT DATE = 9/8/2014	CHECKED - AEU	REVISED -

KANE COUNTY
DIVISION OF TRANSPORTATION

SOIL BORING LOGS I
STRUCTURE NO. 045-3065

SHEET NO. 17 OF 22 SHEETS

C.H.	SECTION	COUNTY	TOTAL SHEETS	SHEET NO.
46	08-00133-01-BR	KANE	87	54

CONTRACT NO. XXXXX

ILLINOIS FED. AID PROJECT

Testing Service Corporation

STRUCTURE BORING LOG

Date Started 7/28/10
Date Completed 7/28/10

STRUCTURE NO. 045-3036
ROUTE CH46
SECTION 08-00133-01-BR
COUNTY Kane

Boring No. S-2
Station 7+83
Offset 6.42ft RT
Elevation 793.00 ft

Description	Depth	Blows	Qu tsf	W %
Very stiff gray CLAY LOAM, moist A-4				
790.00				
Very stiff gray CLAY LOAM, trace gravel, moist A-4/A-6		6 8 13	B 3.2	12.5
	-55			
780.00				
Stiff to very stiff gray LOAM, trace gravel, moist A-4		4 5 5	B 2.0	9.5
	-65			
775.00				
Hard gray CLAY LOAM, trace to little gravel, moist to damp A-4/A-6		7 12 14	P 4.0	13.2
	-70			
	-75	7 10 14	B 4.1	12.9

STRUCTURE NO. 045-3036
ROUTE CH46
SECTION 08-00133-01-BR
COUNTY Kane

Elevation 768.00 ft

Description	Depth	Blows	Qu tsf	W %
Hard gray CLAY LOAM, trace to little gravel, moist to damp A-4/A-6				
763.00				
	-80	8 12 18	P 4.5	9.6
End of Boring at 80.0'				
CME 55 on Remote Controlled ATV Carrier (#262) CME Automatic Hammer				
3.25" (83 mm) ID HSA				
	-85			
	-90			
	-95			
	-100			

SPT. (N) = Sum of last two blow values in sample. (Qu) B=Bulge S=Shear P=Penetration Test
Stations, Depths, Offset, and Elevations are in Feet

ILDOT_BORING 75422.GPJ IDOT.GDT 7.17.12

Testing Service Corporation

STRUCTURE BORING LOG

Date Started 7/28/10
Date Completed 7/28/10

ROUTE CH46 DESCRIPTION Walker Road over Burlington Creek
SECT. 08-00133-01-BR STRUCT. NO. 045-3036 DRILLED BY TSC L-75,422
COUNTY Kane LOCATION E. End South Abutment S. 19NE/20NW , TWP. 42N , RNG. 6E

Boring No. S-2
Station 7+83
Offset 6.42ft RT
Surface Elev. 843.00 ft

Surface Water Elev.
Groundwater Elev.:
when drilling 840.0
at Completion 835.0
after Hrs.

Description	Depth	Blows	Qu tsf	W %
11½" Bituminous Concrete				
842.00				
FILL - Brown SAND, trace to little gravel, moist A-1-b		4 6 6		5.8
840.00				
FILL - Dark brown and gray CLAY LOAM, trace organic, very moist A-6		6 2 2	P 0.5	17.9
	-5			
		2 2 2	B 0.4	28.9
835.00				
Medium dense gray SAND and GRAVEL, saturated A-1-b		4 5 5		7.6
	-10			
		4 6 9		12.3
		5 6 8		15.4
	-15			
827.50				
Medium dense gray SAND, trace to little gravel, A-1-b		6 8 8		16.2
		5 7 9		14.1
	-20			
		8 10 11		12.2
		8 9 11		17.8
	-25			
817.50				
Medium dense gray SANDY LOAM, wet A-2-4		9 11 13		16.0
815.00				
Loose gray SILT, some fine sand, wet A-4		3 3 3		11.8
	-30			
810.00				
Very stiff to hard gray LOAM, trace gravel, occasional Cobbles, moist A-4		6 7 9	P 3.25	9.6
	-35			
	-40	10 22 21	P 4.25	9.9
800.00				
Very stiff gray LOAM, moist A-4		6 8 10	B 3.8	13.3
	-45			
	-50	6 7 10	B 2.2	8.4

SPT. (N) = Sum of last two blow values in sample. (Qu) B=Bulge S=Shear P=Penetration Test
Stations, Depths, Offset, and Elevations are in Feet

ILDOT_BORING 75422.GPJ IDOT.GDT 7.17.12

FILE NAME = W:\Projects\2013\138174 WalkerPhil\cadd\Structural\Dgn\045306S-018-Soil Boring Logs II.dgn

WILLS BURKE KELSEY ASSOCIATES LTD.
116 West Main Street, Suite 201
St. Charles, Illinois 60174

USER NAME = nparris	DESIGNED - JMM	REVISED -
	CHECKED - AEU	REVISED -
PLOT SCALE = $SCALE$	DRAWN - JMM	REVISED -
PLOT DATE = 9/8/2014	CHECKED - AEU	REVISED -

KANE COUNTY
DIVISION OF TRANSPORTATION

SOIL BORING LOGS II
STRUCTURE NO. 045-3065

SHEET NO. 18 OF 22 SHEETS

C.H.	SECTION	COUNTY	TOTAL SHEETS	SHEET NO.
46	08-00133-01-BR	KANE	87	55

CONTRACT NO. XXXXX

ILLINOIS FED. AID PROJECT

B.M. # 1 - N.E. Cor. 12th Step - School - Rt. Sta. 0+65
Elev. - 107.28
Existing Structure - Steel leg bridge & Steel truss - Plank floor
35' Span - 14' Roadway - Wings - wood plank - Abuts. - 6" Channels
backed with plank - Structural steel to be salvaged.
Existing Structure to be removed by Contractor.

STATE OF ILLINOIS
COUNTY OF KANE
COUNTY HIGHWAY DEPARTMENT

State Aid Route No.	Section	County	Total Sheets	Sheet No.
46	133B-M.F.T.	Kane	6	2

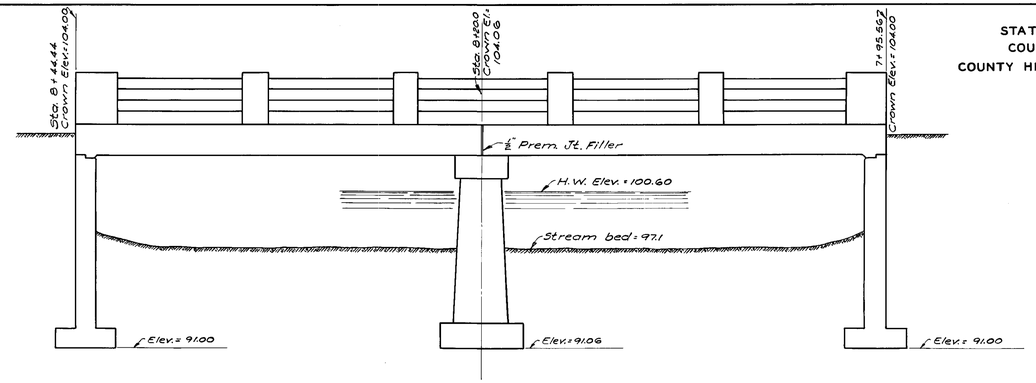

ELEVATION

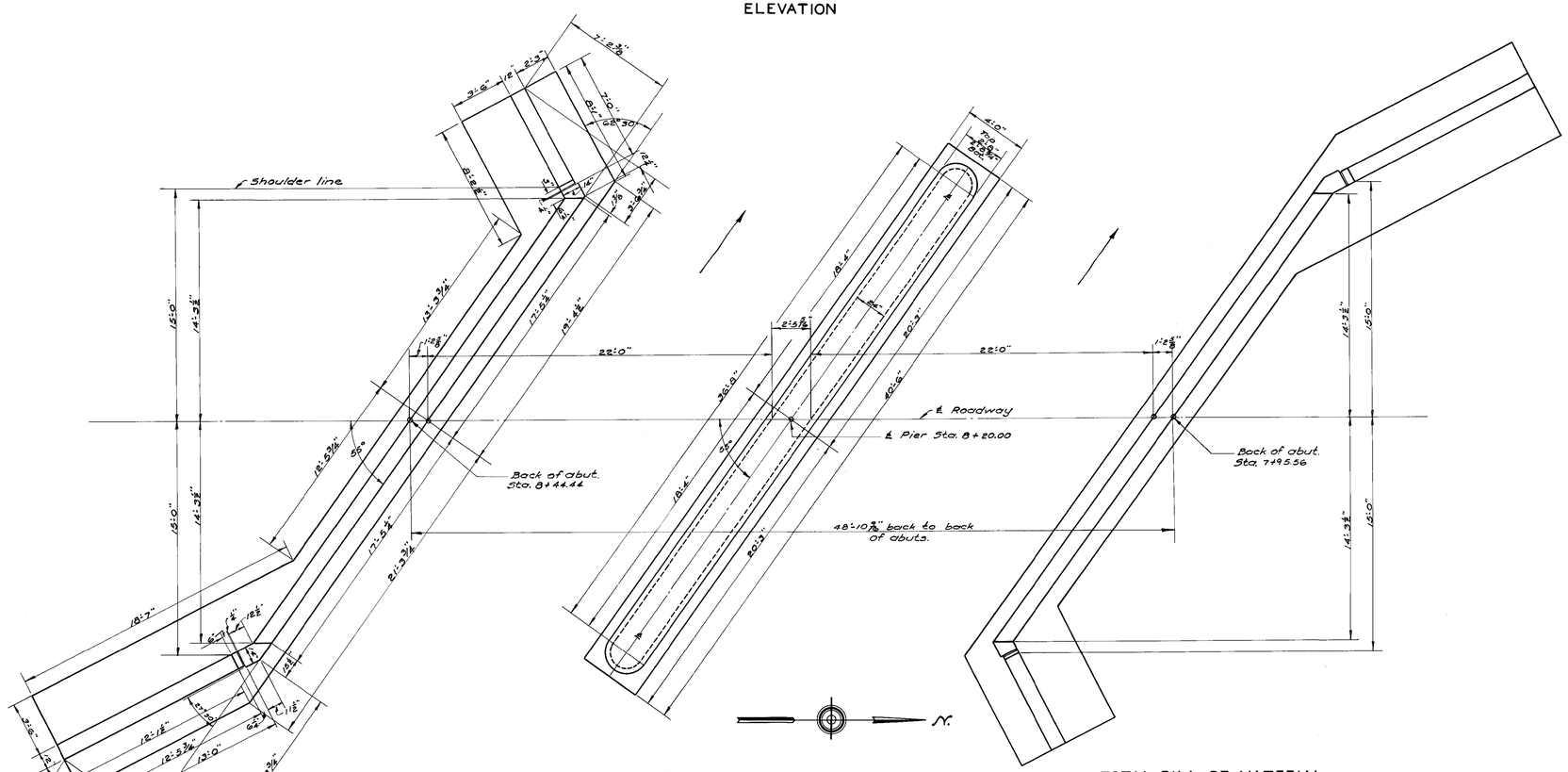

PLAN

TOTAL BILL OF MATERIAL

ITEM		SUPER.	PIER	ABUTS.	TOTAL
Class A Concrete	Cu. Yds.		44.2		44.2
Class "X" Concrete	Cu. Yds.	65.8		69.4	135.2
Handrail Concrete	Cu. Yds.	4.4			4.4
Reinforcement Bars	Lbs.	12,270		4,520	16,790
Removal of Exist. Str.	Ea.	One			One
Name Plate	Ea.	One			One

ASSEMBLED C.B.C.
DRAWN C.B.C.
EXAMINED
PASSED
APPROVED

MAYNARD BRIDGE
OVER COON CREEK
HAMPSHIRE TOWNSHIP
KANE COUNTY
STA. 8+20.00

FILE NAME = W:\Projects\2013\130174 Walker-Phil\cadd\Structural\Dgn\0453065-01-Existing Plans 1.dgn

WILLS BURKE KELSEY ASSOCIATES LTD.
116 West Main Street, Suite 201
St. Charles, Illinois 60174

USER NAME = nparris	DESIGNED - JMM	REVISED -	
	CHECKED - AEU	REVISED -	
PLOT SCALE = $SCALE$	DRAWN - JMM	REVISED -	
PLOT DATE = 9/8/2014	CHECKED - AEU	REVISED -	

KANE COUNTY
DIVISION OF TRANSPORTATION

EXISTING PLANS I
STRUCTURE NO. 045-3065

SHEET NO. 19 OF 22 SHEETS

C.H.	SECTION	COUNTY	TOTAL SHEETS	SHEET NO.
46	08-00133-01-BR	KANE	87	56
		CONTRACT NO. XXXXX		
	ILLINOIS FED. AID PROJECT			

STATE OF ILLINOIS
COUNTY OF KANE
COUNTY HIGHWAY DEPARTMENT

State Aid Route No.	Section	County	Total Sheets	Sheet No.
46	1338-M.F.T.	Kane	6	3

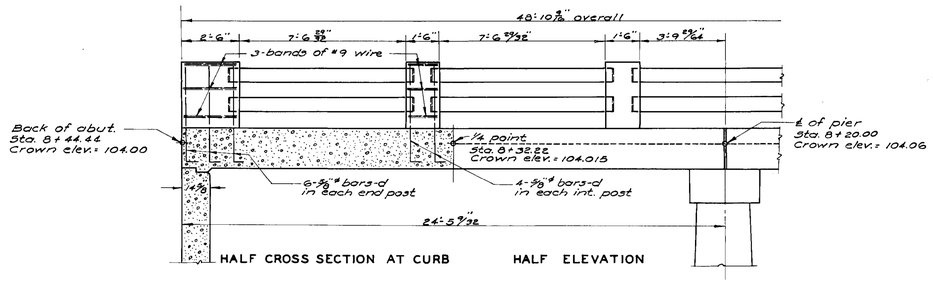

HALF CROSS SECTION AT CURB HALF ELEVATION

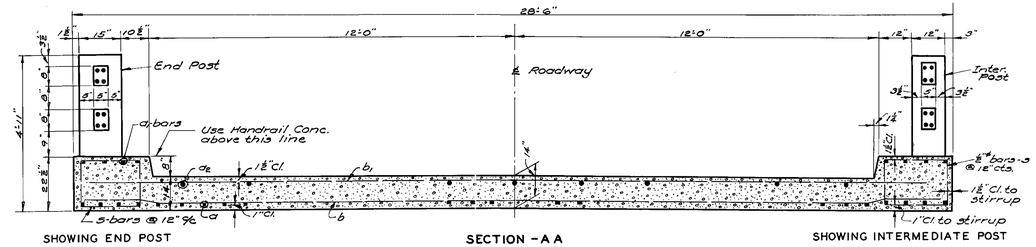

SHOWING END POST SECTION - A A SHOWING INTERMEDIATE POST

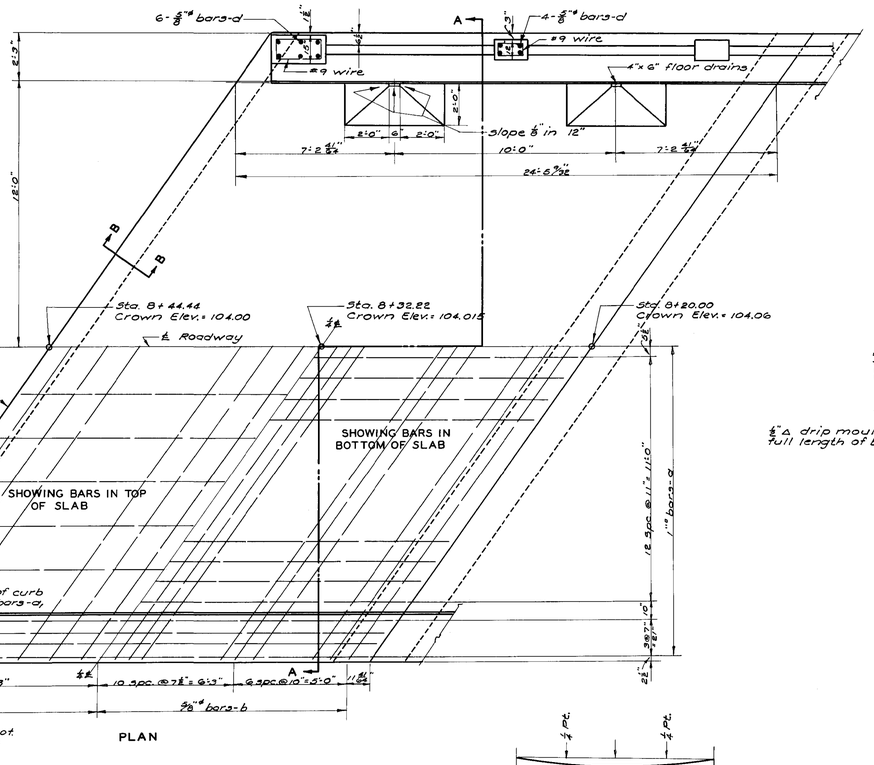

PLAN

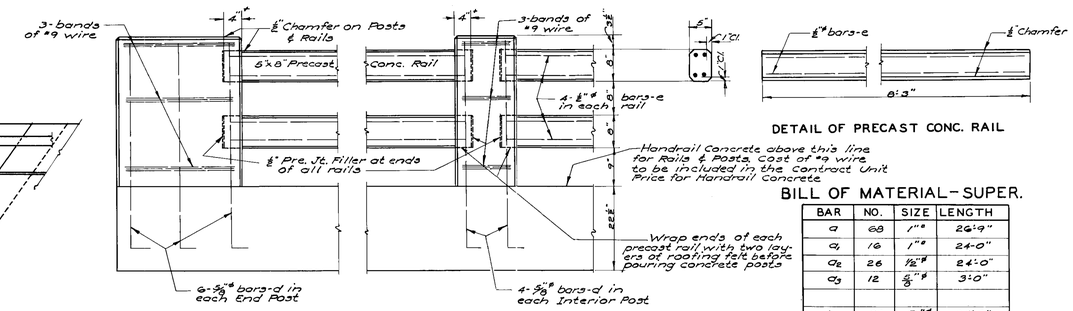

DETAIL OF RAIL

DETAIL OF PRECAST CONC. RAIL

BILL OF MATERIAL - SUPER.

BAR	NO.	SIZE	LENGTH
a	68	1" □	26'-9"
a_1	16	1" □	24'-0"
a_2	26	1/2" □	24'-0"
a_3	12	5/8" □	3'-0"
b	66	5/8" □	34'-6"
b_1	32	1/2" □	34'-6"
s	98	1/2" □	7'-6"
d	56	5/8" □	5'-0"
e	80	1/2" □	8'-0"
Class X Concrete - Cu. Yds.			65.8
Handrail Conc. - Cu. Yds.			4.4
Reinforcing Bars - Lbs.			12,270
Removal of Exist. Str.		Ea.	One
Name Plate		Ea.	One

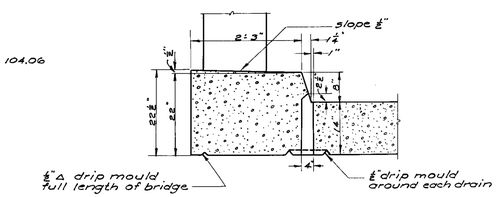

DETAIL OF DRAIN

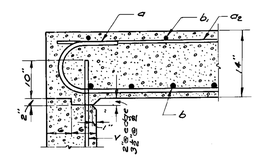

SECTION - BB

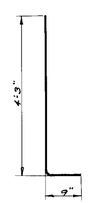

DETAIL OF d BAR

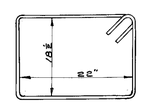

DETAIL OF s BAR

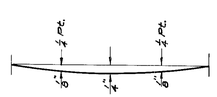

D. L. DEFLECTION DIAGRAM
Per Span

Add Dead Load Deflections to camber provided by crown elevations shown.

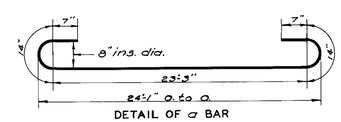

DETAIL OF a BAR

$f_s = 20{,}000$ #/□"
$f_c = 1{,}200$ #/□" super str.
$f_c = 800$ #/□" substr.
$n = 10$

H-15 LOADING

GENERAL NOTES

Class X Concrete shall be used thruout except as noted. Class A concrete shall be used in pier; Handrail Concrete in Posts & Rails.

Cost of #9 wire in Rail Posts to be included in the contract unit price for Handrail Concrete.

Premoulded Joint Filler shall conform to Art. 115.07 or 115.08 of the Standard Specifications.

Concrete floor slab shall be finished in accordance with Art 61.3 (e) of the Standard Specifications.

The concrete floor slab (one span) shall be poured in one continuous operation.

Curb shall be poured monolithically with the slab.

Handrail shall not be poured until after the Falsework has been removed.

Structural grade reinforcement bars will not be permitted.

MAYNARD BRIDGE
OVER COON CREEK
HAMPSHIRE TOWNSHIP
KANE COUNTY
STA. 8 +20.00

ASSEMBLED c.b.c.
DRAWN c.b.c.
EXAMINED
PASSED
APPROVED

FILE NAME = W:\Projects\2013\130174 WalkerPhil\cadd\Structural\Dgn\0453065-020-Existing Plans II.dgn

WILLS BURKE KELSEY ASSOCIATES LTD.
116 West Main Street, Suite 201
St. Charles, Illinois 60174

USER NAME = nparris	DESIGNED - JMM	REVISED -
	CHECKED - AEU	REVISED -
PLOT SCALE = $SCALE$	DRAWN - JMM	REVISED -
PLOT DATE = 9/8/2014	CHECKED - AEU	REVISED -

KANE COUNTY
DIVISION OF TRANSPORTATION

EXISTING PLANS II
STRUCTURE NO. 045-3065
SHEET NO. 20 OF 22 SHEETS

C.H.	SECTION	COUNTY	TOTAL SHEETS	SHEET NO.
46	08-00133-01-BR	KANE	87	57

CONTRACT NO. XXXXX
ILLINOIS FED. AID PROJECT

STATE OF ILLINOIS
COUNTY OF KANE
COUNTY HIGHWAY DEPARTMENT

State Aid Route No.	Section	County	Total Sheets	Sheet No.
46	133B-M.F.T.	Kane	6	4

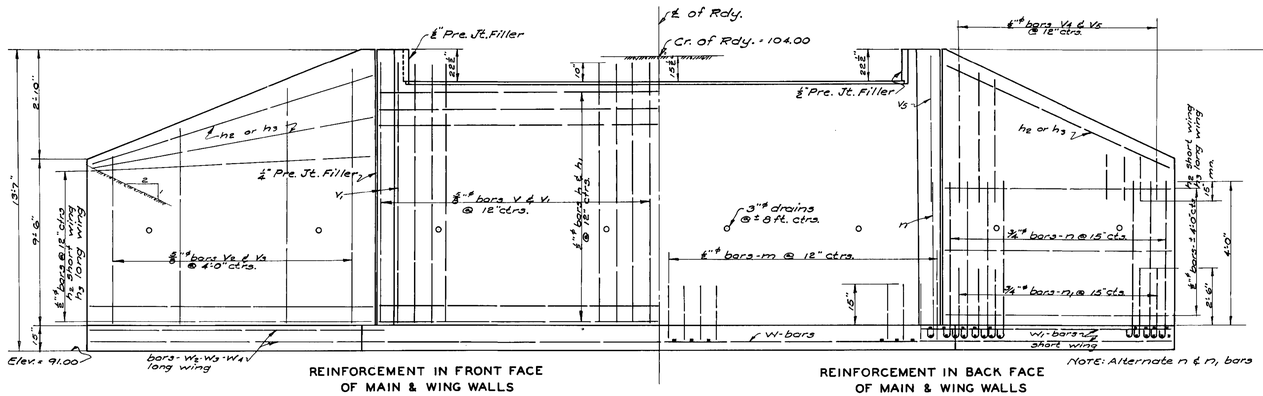

ELEVATION

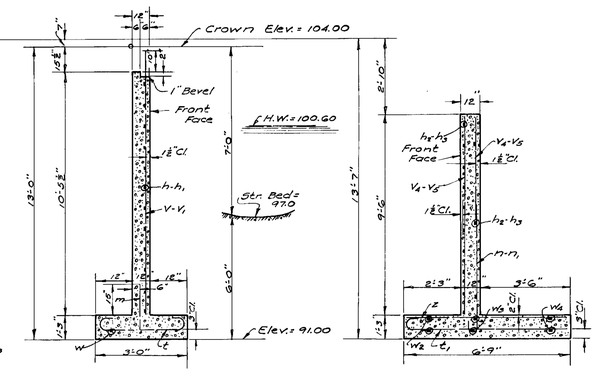

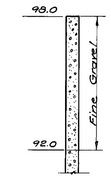

BORING DATA

Boring data are shown on the plans only as a guide to bidders in estimating soil conditions which may be encountered in the work.

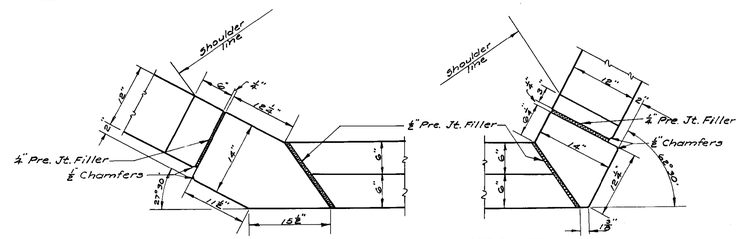

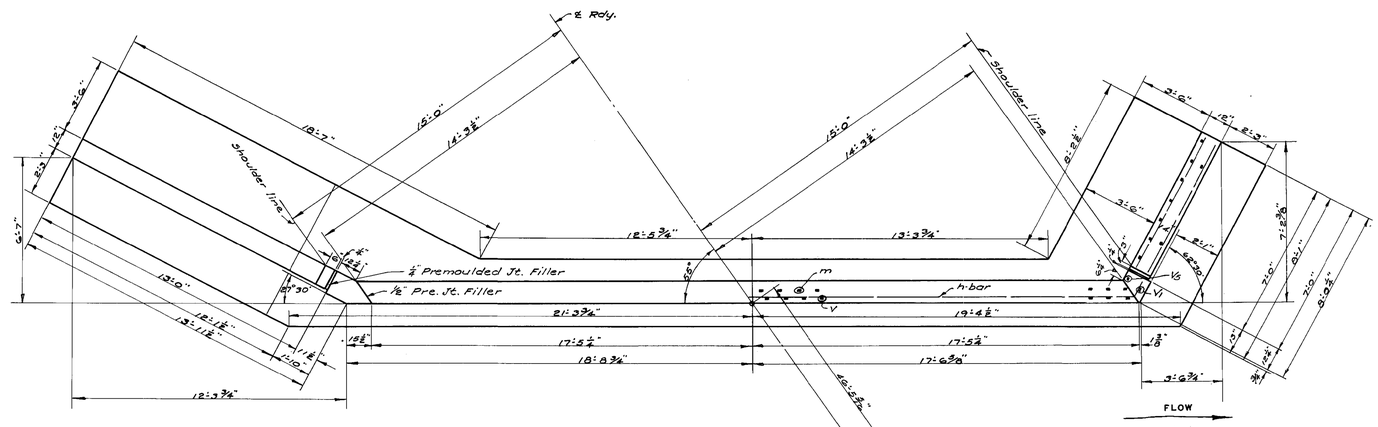

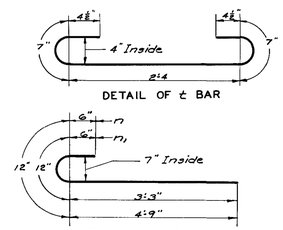

BILL OF MATERIAL-TWO ABUTMENTS

BAR	NO.	SIZE	LENGTH	BAR	NO.	SIZE	LENGTH
h	22	½"-#	19'-0"	m	74	½"-#	2'-3"
h1	22	½"-#	20'-0"				
h2	32	½"-#	6'-6"	n	38	¾"-#	6'-3"
h3	32	½"-#	12'-6"	n1	34	¾"-#	4'-9"
V	74	⅝"-#	11'-3"	t	78	⅝"-#	4'-3"
V1	6	⅝"-#	12'-0"	t1	54	⅝"-#	7'-0"
V2	6	⅝"-#	9'-6"				
V3	6	⅝"-#	11'-0"	Z	68	⅝"-#	6'-6"
V4	23	½"-#	7'-6"				
V5	23	½"-#	9'-0"	W	8	½"-#	20'-0"
				W1	12	½"-#	7'-6"
				W2	4	½"-#	11'-9"
				W3	4	½"-#	14'-6"
				W4	4	½"-#	17'-0"
Class X Concrete						Cu. Yds.	69.4
Reinforcement Bars						Lbs.	4520

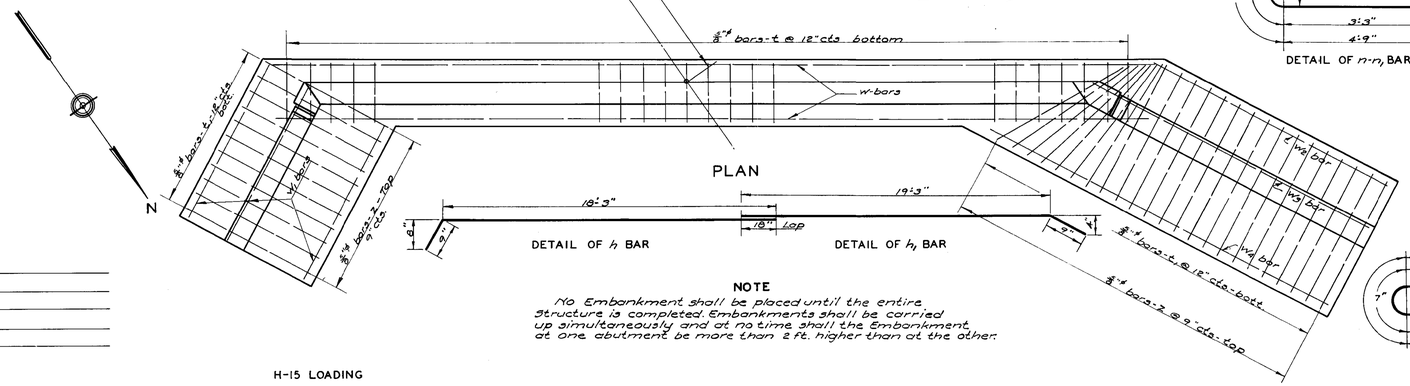

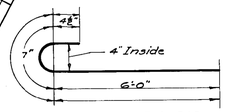

NOTE

No Embankment shall be placed until the entire structure is completed. Embankments shall be carried up simultaneously and at no time shall the Embankment at one abutment be more than 2 ft. higher than at the other.

H-15 LOADING

MAYNARD BRIDGE
OVER COON CREEK
HAMPSHIRE TOWNSHIP
KANE COUNTY
STA. 8 +20.00

ASSEMBLED C.B.C.
DRAWN C.B.C.
EXAMINED
PASSED
APPROVED

FILE NAME = W:\Projects\2013\130174 WalkerPhil\cadd\Structural\Dgn\0453065-021-Existing Plans III.dgn

WILLS BURKE KELSEY ASSOCIATES LTD.
116 West Main Street, Suite 201
St. Charles, Illinois 60174

USER NAME = nparris	DESIGNED - JMM	REVISED -	
	CHECKED - AEU	REVISED -	
PLOT SCALE = $SCALE$	DRAWN - JMM	REVISED -	
PLOT DATE = 9/8/2014	CHECKED - AEU	REVISED -	

KANE COUNTY
DIVISION OF TRANSPORTATION

EXISTING PLANS III
STRUCTURE NO. 045-3065

SHEET NO. 21 OF 22 SHEETS

C.H.	SECTION	COUNTY	TOTAL SHEETS	SHEET NO.
46	08-00133-01-BR	KANE	87	58

CONTRACT NO. XXXXX

ILLINOIS FED. AID PROJECT

STATE OF ILLINOIS
COUNTY OF KANE
COUNTY HIGHWAY DEPARTMENT

State Aid Route No.	Section	County	Total Sheets	Sheet No.
46	133B-M.F.T	Kane	6	5

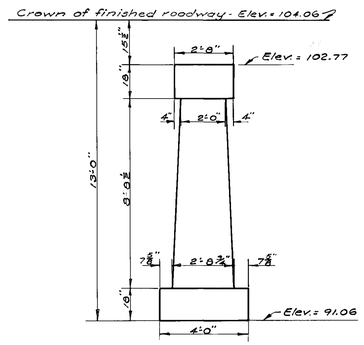

END ELEVATION

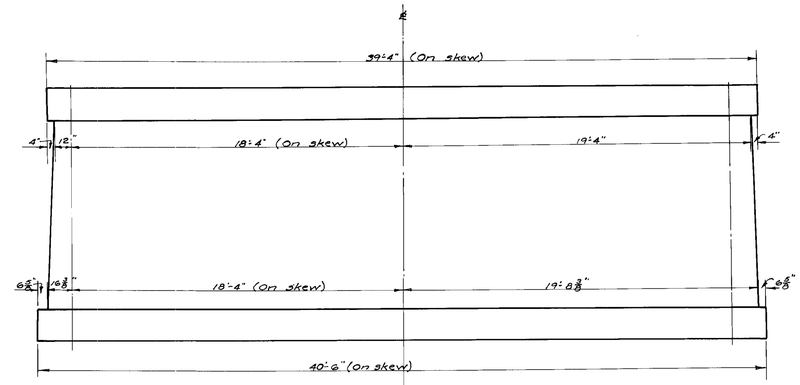

SIDE ELEVATION

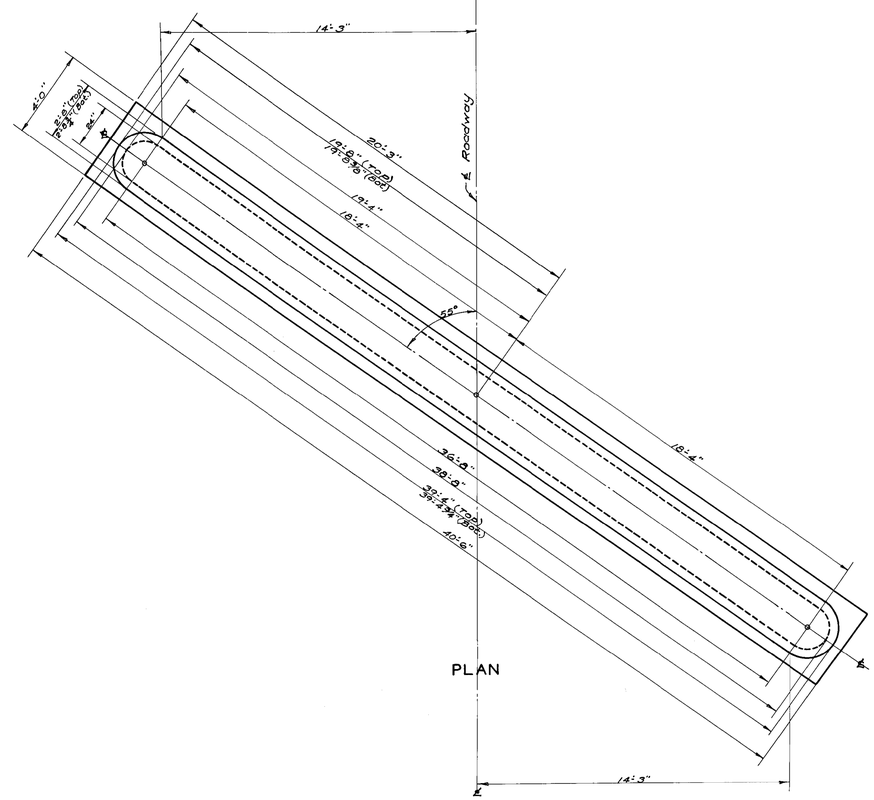

PLAN

NOTE
Class A Concrete shall be used throughout.

BILL OF MATERIAL
44.2 Cu.Yds. Class A Conc.

ASSEMBLED C.B.C.
DRAWN C.B.C.
EXAMINED
PASSED
APPROVED

MAYNARD BRIDGE
OVER COON CREEK
HAMPSHIRE TOWNSHIP
KANE COUNTY
STA. 8 +20.00

FILE NAME = W:\Projects\2013\130174 WalkerPhil\cadd\Structural\Dgn\0453065-022-Existing Plans IV.dgn

WILLS BURKE KELSEY ASSOCIATES LTD.
116 West Main Street, Suite 201
St. Charles, Illinois 60174

USER NAME = nparris	DESIGNED - JMM	REVISED -	
	CHECKED - AEU	REVISED -	
PLOT SCALE = $SCALE$	DRAWN - JMM	REVISED -	
PLOT DATE = 9/8/2014	CHECKED - AEU	REVISED -	

KANE COUNTY
DIVISION OF TRANSPORTATION

EXISTING PLANS IV
STRUCTURE NO. 045-3065
SHEET NO. 22 OF 22 SHEETS

C.H.	SECTION	COUNTY	TOTAL SHEETS	SHEET NO.
46	08-00133-01-BR	KANE	87	59
		CONTRACT NO. XXXXX		
		ILLINOIS FED. AID PROJECT		

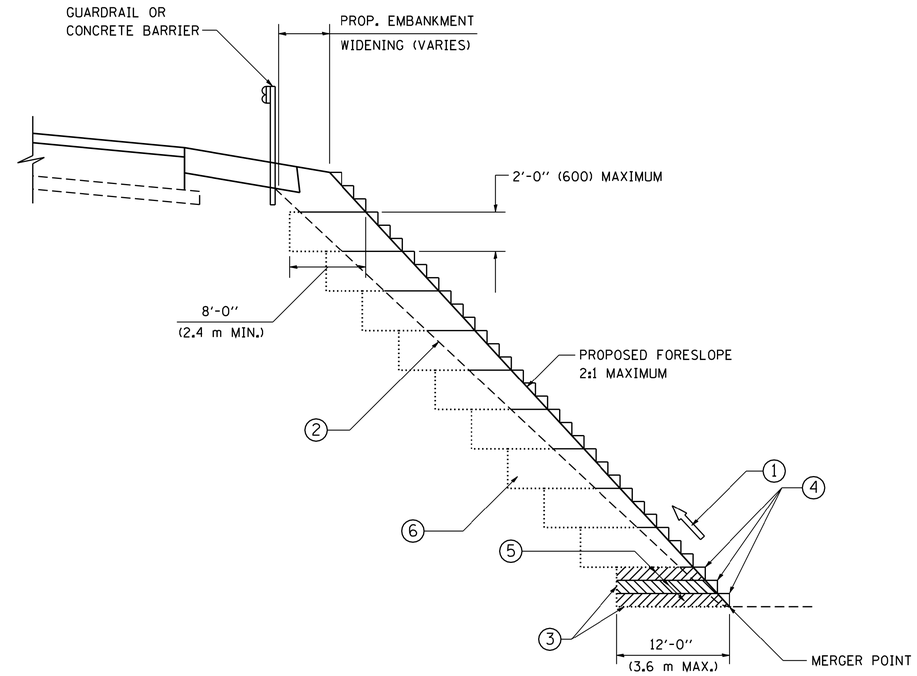

TYPICAL BENCHING DETAIL FOR EMBANKMENT

NOTES:

1. CONSTRUCT SUCCEEDING BENCH CUTS AND EMBANKMENT PLACEMENT AND COMPACTION FROM BOTTOM TO TOP IN STAIRSTEP FASHION.
2. EXISTING FORESLOPE PREPARED IN ACCORDANCE WITH ARTICLE 205.03 OF THE STANDARD SPECIFICATIONS.
3. BENCH CUT EXISTING SLOPE TYPICAL FOR EACH STEP.
4. TRIM TO FINAL SLOPE.
5. EQUAL 8-INCH (200) LIFTS OF EMBANKMENT COMPACTED IN ACCORDANCE WITH ARTICLE 205.05 OF THE STANDARD SPECIFICATIONS.
6. EXCAVATION OF BENCH CUTS WITHIN EXISTING EMBANKMENT WILL BE PAID FOR AT THE CONTRACT UNIT PRICE PER CUBIC METER OR CUBIC YARD FOR "EARTH EXCAVATION". THIS PRICE WILL INCLUDE ALL LABOR AND MATERIAL, NO ADDITIONAL COMPENSATION WILL BE ALLOWED.
7. SLOPES SHALL BE BENCHED ACCORDING TO THIS DETAIL WHEN THE SLOPE IS STEEPER THAN 4:1 AND THE HEIGHT IS GREATER THAN 5' (1.5 m).

ALL DIMENSIONS ARE IN INCHES (MILLIMETERS) UNLESS OTHERWISE SHOWN.

FILE NAME = W:\Projects\2013\130174 WalkerPhil\cadd\Civil\Dgn\Sht\DT_D1-BD51.dgn

FILE NAME = W:\diststd\22x34\bd51.dgn	USER NAME = gaglianobt	DESIGNED -	REVISED -
		DRAWN - CADD	REVISED -
	PLOT SCALE = 50.0000 ' / IN.	CHECKED - S.E.B.	REVISED -
	PLOT DATE = 1/4/2008	DATE - 06-16-04	REVISED -

STATE OF ILLINOIS
DEPARTMENT OF TRANSPORTATION

BENCHING DETAIL
FOR EMBANKMENT WIDENING

SCALE: NONE | SHEET NO. 1 OF 1 SHEETS | STA. | TO STA.

C.H. RTE.	SECTION	COUNTY	TOTAL SHEETS	SHEET NO.
46	08-00133-01-BR	KANE	87	60
	BD-51	CONTRACT NO.XXXXXX		
FED. ROAD DIST. NO. 1	ILLINOIS	FED. AID PROJECT		

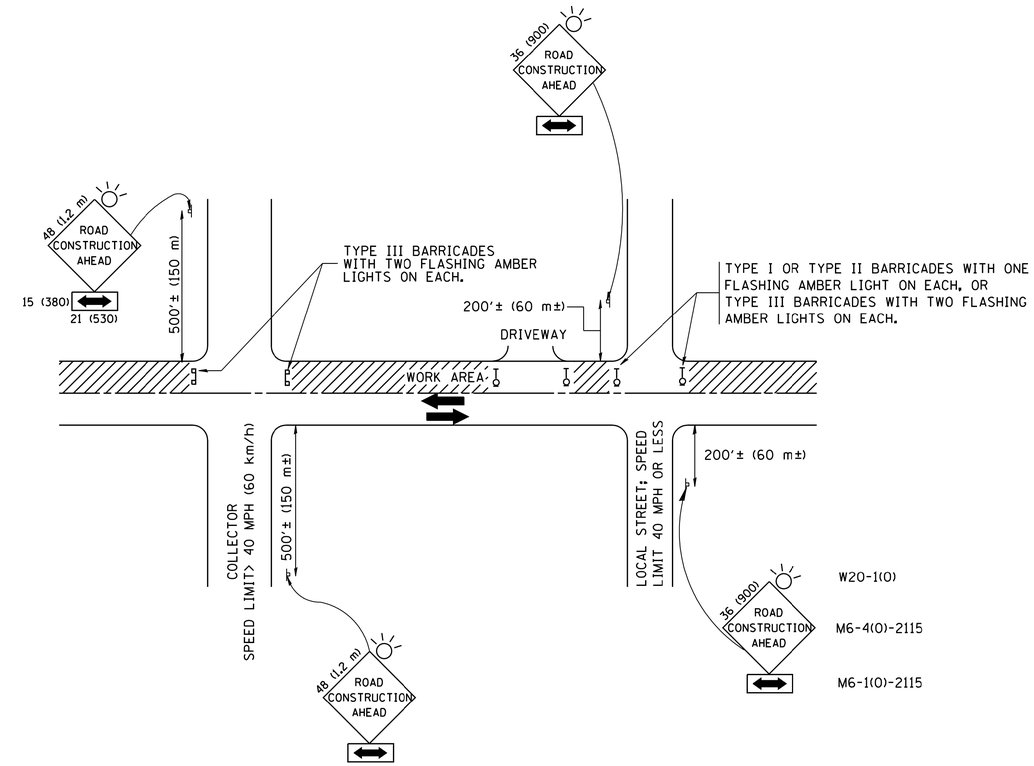

TRAFFIC CONTROL AND PROTECTION FOR SIDE ROADS, INTERSECTIONS, AND DRIVEWAYS

NOTES:

A. FOR NO LANE RESTRICTION ON THE SIDE ROAD OR DRIVEWAYS

1. SIDE ROAD WITH A SPEED LIMIT OF 40 MPH (60 km/h) OR LESS AS SHOWN ON THE DRAWING AND AS DIRECTED BY THE ENGINEER:

   a) ONE **ROAD CONSTRUCTION AHEAD** SIGN 36 x 36 (900x900) WITH A FLASHER AND FLAG MOUNTED ON IT APPROXIMATELY 200' (60 m) IN ADVANCE OF THE MAIN ROUTE.

   b) THE CLOSED PORTION OF THE MAIN ROUTE SHALL BE PROTECTED BY BLOCKING WITH TYPE I, TYPE II OR TYPE III BARRICADES, 1/3 OF THE CROSS SECTION OF THE CLOSED PORTION.

2. SIDE ROAD WITH A SPEED LIMIT GREATER THAN 40 MPH (60 km/h) AS SHOWN ON THE DRAWING AND AS DIRECTED BY THE ENGINEER:

   a) ONE **ROAD CONSTRUCTION AHEAD** SIGN 48 x 48 (1.2 m x 1.2 m) WITH A FLASHER MOUNTED ON IT APPROXIMATELY 500' (150 m) IN ADVANCE OF THE MAIN ROUTE.

   b) THE CLOSED PORTION OF THE MAIN ROUTE SHALL BE PROTECTED BY BLOCKING WITH TYPE III BARRICADES, 1/2 OF THE CROSS SECTION OF THE CLOSED PORTION.

3. WHEN THE SIDE ROAD LIES BETWEEN THE BEGINNING OF THE MAINLINE SIGNING AND THE WORK ZONE, A SINGLE HEADED ARROW (M6-1) SHALL BE USED IN LIEU OF THE DOUBLE HEADED ARROW (M6-4).

B. FOR A LANE CLOSURE ON A SIDE ROAD OR DRIVEWAY:

USE APPLICABLE PORTIONS OF THE TYPICAL APPLICATION OF TRAFFIC CONTROL DEVICES (STD. 701501, STD. 701606 OR THE APPROPRIATE STANDARD). THE SPACING OF SIGNS AND BARRICADES SHALL BE ADJUSTED FOR FIELD CONDITIONS AS DIRECTED BY THE ENGINEER. THE DIRECTIONAL ARROW SHALL BE COVERED OR REMOVED WHEN NO LONGER CONSISTENT WITH THE SIDE ROAD LANE CLOSURE.

C. ADVANCE WARNING SIGNS ARE TO BE OMITTED ON DRIVEWAY UNLESS OTHERWISE NOTED.

D. THE TRAFFIC CONTROL AND PROTECTION FOR SIDE ROADS, INTERSECTIONS, AND DRIVEWAYS SHALL BE INCIDENTAL TO THE COST OF SPECIFIED TRAFFIC CONTROL STANDARDS OR ITEMS.

All dimensions are in millimeters (inches) unless otherwise shown.

FILE NAME = W:\Projects\2013\130174 WalkerPhil\cadd\Civil\Dgn\Sht\DT_D1-TC10.dgn

FILE NAME = W:\diststd\22x34\tc10.dgn	USER NAME = geglianobt	DESIGNED - LHA	REVISED - J. OBERLE 10-18-95	STATE OF ILLINOIS DEPARTMENT OF TRANSPORTATION	TRAFFIC CONTROL AND PROTECTION FOR SIDE ROADS, INTERSECTIONS, AND DRIVEWAYS
		DRAWN -	REVISED - A. HOUSEH 03-06-96		
	PLOT SCALE = 50.000 ' / IN.	CHECKED -	REVISED - A. HOUSEH 10-15-96		
	PLOT DATE = 1/4/2008	DATE - 06-89	REVISED -T. RAMMACHER 01-06-00		SCALE: NONE / SHEET NO. 1 OF 1 SHEETS / STA. TO STA.

C.H. RTE.	SECTION	COUNTY	TOTAL SHEETS	SHEET NO.
46	08-00133-01-BR	KANE	87	61
TC-10		CONTRACT NO.XXXXXX		
FED. ROAD DIST. NO. 1	ILLINOIS	FED. AID PROJECT		

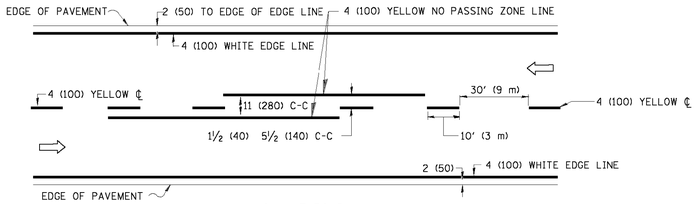

2-LANE ROADWAY

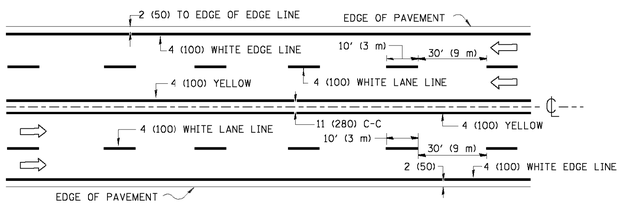

MULTI-LANE UNDIVIDED

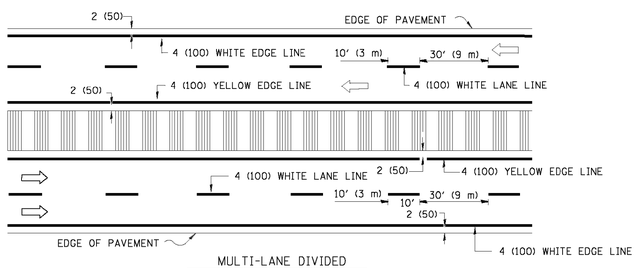

MULTI-LANE DIVIDED
WITH MOUNTABLE MEDIAN

NOTE: MEDIANS WITH BARRIER CURB DO NOT REQUIRE AN EDGE LINE

TYPICAL LANE AND EDGE LINE MARKING

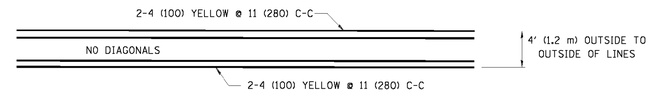

4' (1.2 m) WIDE MEDIANS ONLY

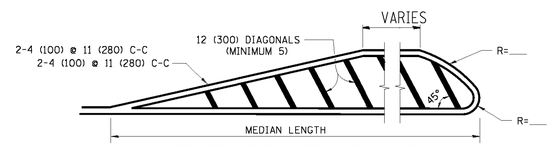

FOR MEDIAN LENGTHS WHERE DIAGONAL SPACING CANNOT BE ATTAINED, USE 5 (FIVE) EQUALLY SPACED DIAGONAL LINES.

DIAGONAL LINE SPACING: 50' (15 m) C-C (LESS THAN 30MPH (50 km/h))
75' (25 m) C-C 30MPH (50 km/h) TO 45MPH (70 km/h))
150' (45 m) C-C (MORE THAN 45MPH (70 km/h))

MEDIANS OVER 4' (1.2 m) WIDE

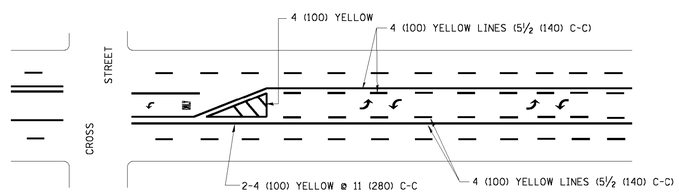

A MINIMUM OF TWO PAIRS OF TURN ARROWS SHALL BE USED, WHITE IN COLOR. ADDITIONAL PAIRS SHALL BE PLACED AT 200' (60 m) TO 300' (90 m) INTERVALS.

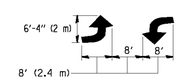

MEDIAN WITH TWO-WAY LEFT TURN LANE

TYPICAL PAINTED MEDIAN MARKING

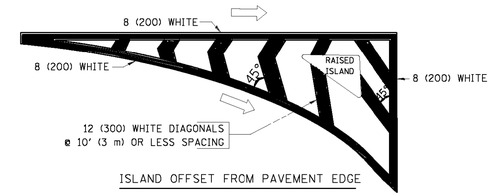

ISLAND OFFSET FROM PAVEMENT EDGE

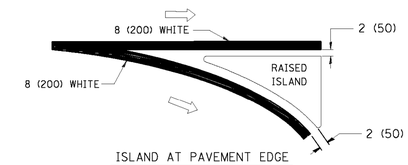

ISLAND AT PAVEMENT EDGE

TYPICAL ISLAND MARKING

TYPE OF MARKING	WIDTH OF LINE	PATTERN	COLOR	SPACING / REMARKS
CENTERLINE ON 2 LANE PAVEMENT	4 (100)	SKIP-DASH	YELLOW	10' (3 m) LINE WITH 30' (9 m) SPACE
CENTERLINE ON MULTI-LANE UNDIVIDED PAVEMENT	2 @ 4 (100)	SOLID	YELLOW	11 (280) C-C
NO PASSING ZONE LINES: FOR ONE DIRECTION FOR BOTH DIRECTIONS	4 (100) 2 @ 4 (100)	SOLID SOLID	YELLOW YELLOW	5½ (140) C-C FROM SKIP-DASH CENTERLINE 11 (280) C-C OMIT SKIP-DASH CENTERLINE BETWEEN
LANE LINES	4 (100) 5 (125) ON FREEWAYS	SKIP-DASH SKIP-DASH	WHITE WHITE	10' (3 m) LINE WITH 30' (9 m) SPACE
DOTTED LINES (EXTENSIONS OF CENTER, LANE OR TURN LANE MARKINGS)	SAME AS LINE BEING EXTENDED	SKIP-DASH	SAME AS LINE BEING EXTENDED	2' (600) LINE WITH 6' (1.8 m) SPACE
EDGE LINES	4 (100)	SOLID	YELLOW-LEFT WHITE-RIGHT	OUTLINE MOUNTABLE MEDIANS IN YELLOW; EDGE LINES ARE NOT USED NEXT TO BARRIER CURB
TURN LANE MARKINGS	6 (150) LINE; FULL SIZE LETTERS & SYMBOLS (8' (2.4m))	SOLID	WHITE	SEE TYPICAL TURN LANE MARKING DETAIL
TWO WAY LEFT TURN MARKING	2 @ 4 (100) EACH DIRECTION 8' (2.4m) LEFT ARROW	SKIP-DASH AND SOLID IN PAIRS	YELLOW WHITE	10' (3 m) LINE WITH 30' (9 m) SPACE FOR SKIP-DASH; 5½ (140) C-C BETWEEN SOLID LINE AND SKIP-DASH LINE SEE TYPICAL TWO-WAY LEFT TURN MARKING DETAIL
CROSSWALK LINES (PEDESTRIAN) A. DIAGONALS (BIKE & EQUESTRIAN) B. LONGITUDINAL BARS (SCHOOL)	2 @ 6 (150) 12 (300) @ 45° 12 (300) @ 90°	SOLID SOLID SOLID	WHITE WHITE WHITE	NOT LESS THAN 6' (1.8 m) APART 2' (600) APART 2' (600) APART SEE TYPICAL CROSSWALK MARKING DETAILS.
STOP LINES	24 (600)	SOLID	WHITE	PLACE 4' (1.2 m) IN ADVANCE OF AND PARALLEL TO CROSSWALK, IF PRESENT. OTHERWISE, PLACE AT DESIRED STOPPING POINT. PARALLEL TO CROSSROAD CENTERLINE, WHERE POSSIBLE
PAINTED MEDIANS	2 @ 4 (100) WITH 12 (300) DIAGONALS @ 45° NO DIAGONALS USED FOR 4' (1.2 m) WIDE MEDIANS	SOLID	YELLOW: TWO WAY TRAFFIC WHITE: ONE WAY TRAFFIC	11 (280) C-C FOR THE DOUBLE LINE SEE TYPICAL PAINTED MEDIAN MARKING.
GORE MARKING AND CHANNELIZING LINES	8 (200) WITH 12 (300) DIAGONALS @ 45°	SOLID	WHITE	DIAGONALS: 15' (4.5 m) C-C (LESS THAN 30MPH (50 km/h)) 20' (6 m) C-C 30MPH (50 km/h) TO 45MPH (70 km/h)) 30' (9 m) C-C (OVER 45MPH (70 km/h))
RAILROAD CROSSING	24 (600) TRANSVERSE LINES; "RR" IS 6' (1.8 m) LETTERS; 16 (400) LINE FOR "X"	SOLID	WHITE	SEE STATE STANDARD 780001 AREA OF: "R"=3.6 SQ. FT. (0.33 m^2) EACH "X"=54.0 SQ. FT. (5.0 m^2)
SHOULDER DIAGONALS	12 (300) @ 45°	SOLID	WHITE - RIGHT YELLOW - LEFT	50' (15 m) C-C (LESS THAN 30MPH (50 km/h)) 75' (25 m) C-C (30 MPH (50 km/h) TO 45MPH (70 km/h)) 150' (45 m) C-C (OVER 45MPH (70 km/h))

FOR FURTHER DETAILS ON PAVEMENT MARKING REFER TO STANDARD SPECIFICATIONS FOR ROAD AND BRIDGE CONSTRUCTION AND STATE STANDARD 780001.

All dimensions are in inches (millimeters) unless otherwise shown.

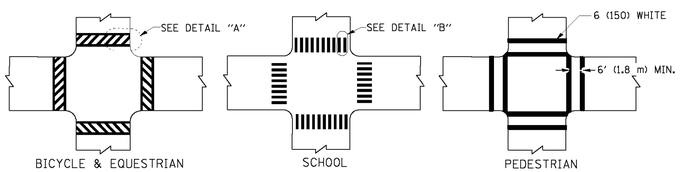

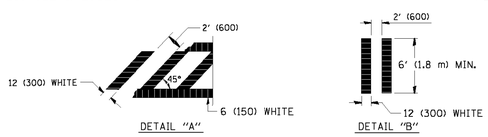

TYPICAL CROSSWALK MARKING

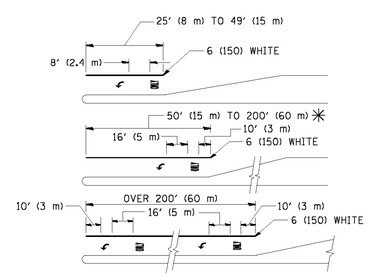

FULL SIZE LETTERS 8' (2.4 m) AND ARROWS SHALL BE USED.
↰ AREA = 15.6 SQ. FT. (1.5 m^2) ONLY AREA = 20.8 SQ. FT. (1.9 m^2)

✳ TURN LANES IN EXCESS OF 400' (120 m) IN LENGTH MAY HAVE AN ADDITIONAL SET OF ARROW - "ONLY" INSTALLED MIDWAY BETWEEN THE OTHER TWO SETS OF ARROW - "ONLY".

TYPICAL LEFT (OR RIGHT) TURN LANE

TYPICAL TURN LANE MARKING

FILE NAME = W:\Projects\2013\130174 WalkerPhil\cadd\Civil\Dgn\Sht\DT_D1-TC13.dgn

FILE NAME = c:\pw_work\pwidot\drivakosgn\d0108315\tc13.dgn	USER NAME = drivakosgn	DESIGNED - EVERS	REVISED - T. RAMMACHER 10-27-94
		DRAWN -	REVISED - C. JUCIUS 09-09-09
	PLOT SCALE = 50.000 ' / IN.	CHECKED -	REVISED -
	PLOT DATE = 9/9/2009	DATE - 03-19-90	REVISED -

STATE OF ILLINOIS
DEPARTMENT OF TRANSPORTATION

DISTRICT ONE
TYPICAL PAVEMENT MARKINGS

SCALE: NONE | SHEET NO. 1 OF 1 SHEETS | STA. | TO STA.

C.H. RTE.	SECTION	COUNTY	TOTAL SHEETS	SHEET NO.
46	08-00133-01-BR	KANE	87	62
	TC-13	CONTRACT NO.XXXXXX		

FED. ROAD DIST. NO. 1 | ILLINOIS | FED. AID PROJECT

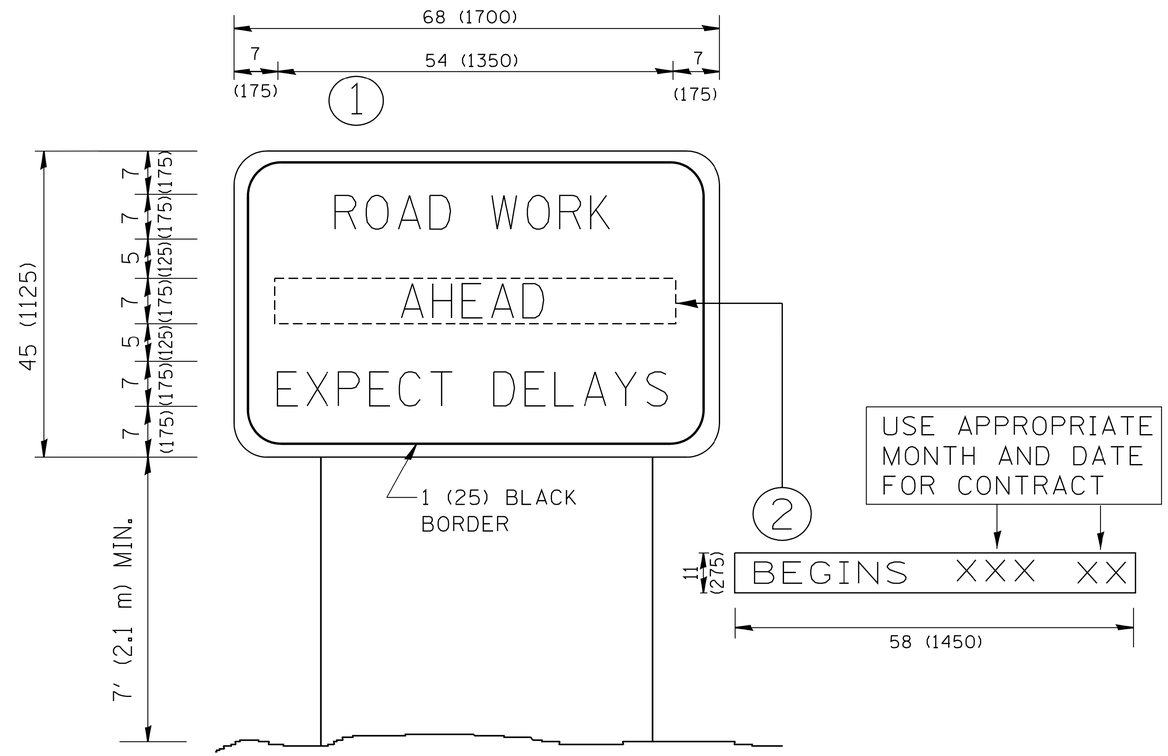

NOTES:

1. USE BLACK LETTERING ON ORANGE BACKGROUND.
2. ERECT SIGNS IN ADVANCE OF THE LOCATION FOR THE "ROAD CONSTRUCTION AHEAD" SIGN AT LOCATIONS AS DIRECTED BY THE ENGINEER.
3. ERECT SIGN 1 WITH INSTALLED PANEL 2 ONE WEEK PRIOR TO THE START OF CONSTRUCTION.
4. REMOVE PANEL 2 SOON AFTER THE START OF CONSTRUCTION.
5. SEE SPECIAL PROVISION FOR "TEMPORARY INFORMATION SIGNING" FOR ADDITIONAL INFORMATION.
6. ONE SIGN ASSEMBLY EQUALS 25.70 SQ. FT. (2.3 SQ. M.)
7. SHALL BE PAID FOR AS TEMPORARY INFORMATION SIGNING.

ALL DIMENSIONS ARE IN INCHES (MILLIMETERS) UNLESS OTHERWISE SHOWN.

FILE NAME = W:\Projects\2013\130174 WalkerPhil\cadd\Civil\Dgn\Sht\DT_D1-TC22.dgn

FILE NAME = W:\diststd\22x34\tc22.dgn	USER NAME = gaglianobt	DESIGNED -	REVISED - R. MIRS 09-15-97	STATE OF ILLINOIS DEPARTMENT OF TRANSPORTATION	ARTERIAL ROAD INFORMATION SIGN			C.H. RTE.	SECTION	COUNTY	TOTAL SHEETS	SHEET NO.
		DRAWN -	REVISED - R. MIRS 12-11-97					46	08-00133-01-BR	KANE	87	63
	PLOT SCALE = 50.000 ' / IN.	CHECKED -	REVISED - T. RAMMACHER 02-02-99					TC-22		CONTRACT NO.XXXXXX		
	PLOT DATE = 1/4/2008	DATE -	REVISED - C. JUCIUS 01-31-07		SCALE: NONE	SHEET NO. 1 OF 1 SHEETS	STA. TO STA.	FED. ROAD DIST. NO. 1	ILLINOIS	FED. AID PROJECT		

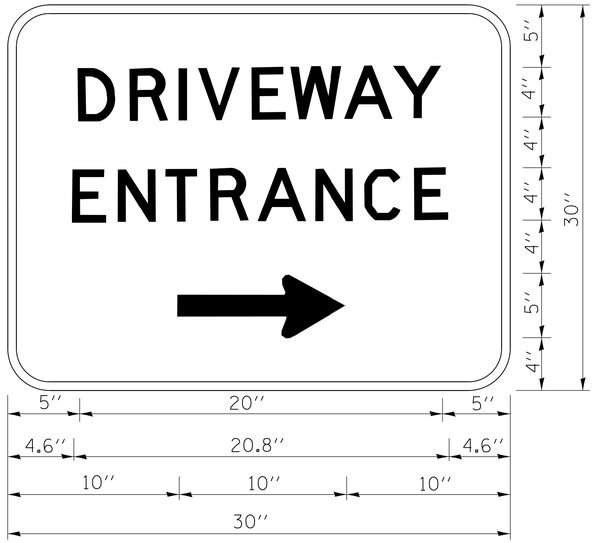

3.0'' RADIUS, 0.5'' BORDER, WHITE ON GREEN; REFLECTORIZED
''DRIVEWAY'' D; ''ENTRANCE'' D; STANDARD ARROW CUSTOM 12.0'' × 5.0''

NOTES:

1. HALF OF THE SIGNS WILL REQUIRE A LEFT HAND FACING ARROW.
2. TWO SIGNS SHALL BE USED AT EACH COMMERCIAL ENTRANCE PLACED BACK-TO-BACK: ONE WITH A RIGHT HAND ARROW (SHOWN) SHALL BE PLACED ON THE NEAR RIGHT SIDE THE DRIVEWAY AND ONE WITH A LEFT HAND ARROW SHALL BE PLACED ON THE FAR LEFT SIDE OF THE DRIVEWAY.
3. SIGNS TO BE PAID FOR AS ITEM ''TEMPORARY INFORMATION SIGNING''.

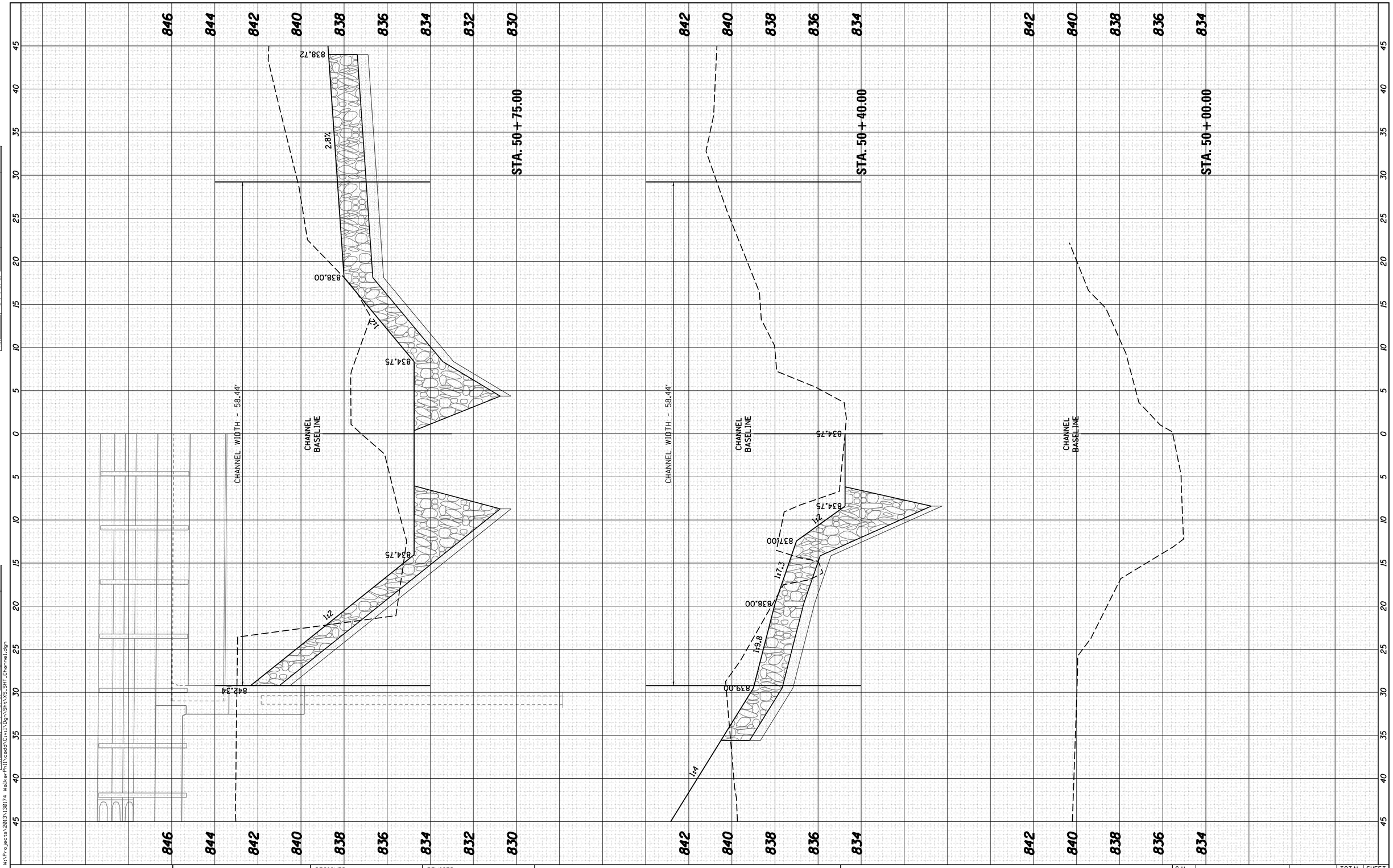

FINAL SURVEY		BY	DATE
NOTE BOOK	SURVEYED		
	PLOTTED		
	TEMPLATE		
	AREAS		
NO.	AREAS CHECKED		

ORIGINAL SURVEY		BY	DATE
NOTE BOOK	SURVEYED		
	PLOTTED		
	TEMPLATE		
	AREAS		
NO.	AREAS CHECKED		

FILE NAME = W:\Projects\2013\130174 Walker\Phil\cadd\Civil\Dgn\Sht\XS_SHT_Channel.dgn

WBK
WILLS BURKE KELSEY ASSOCIATES LTD.
116 West Main Street, Suite 201
St. Charles, Illinois 60174

USER NAME = nparris	DESIGNED -	REVISED -
	DRAWN -	REVISED -
PLOT SCALE = 1:5	CHECKED -	REVISED -
PLOT DATE = 9/8/2014	DATE -	REVISED -

KANE COUNTY
DIVISION OF TRANSPORTATION

CROSS SECTIONS
CHANNEL

SCALE: | SHEET NO. 1 OF 3 SHEETS | STA. | TO STA.

C.H. RTE.	SECTION	COUNTY	TOTAL SHEETS	SHEET NO.
46	08-00133-01-BR	KANE	87	65
		CONTRACT NO.XXXXXX		
		ILLINOIS FED. AID PROJECT		

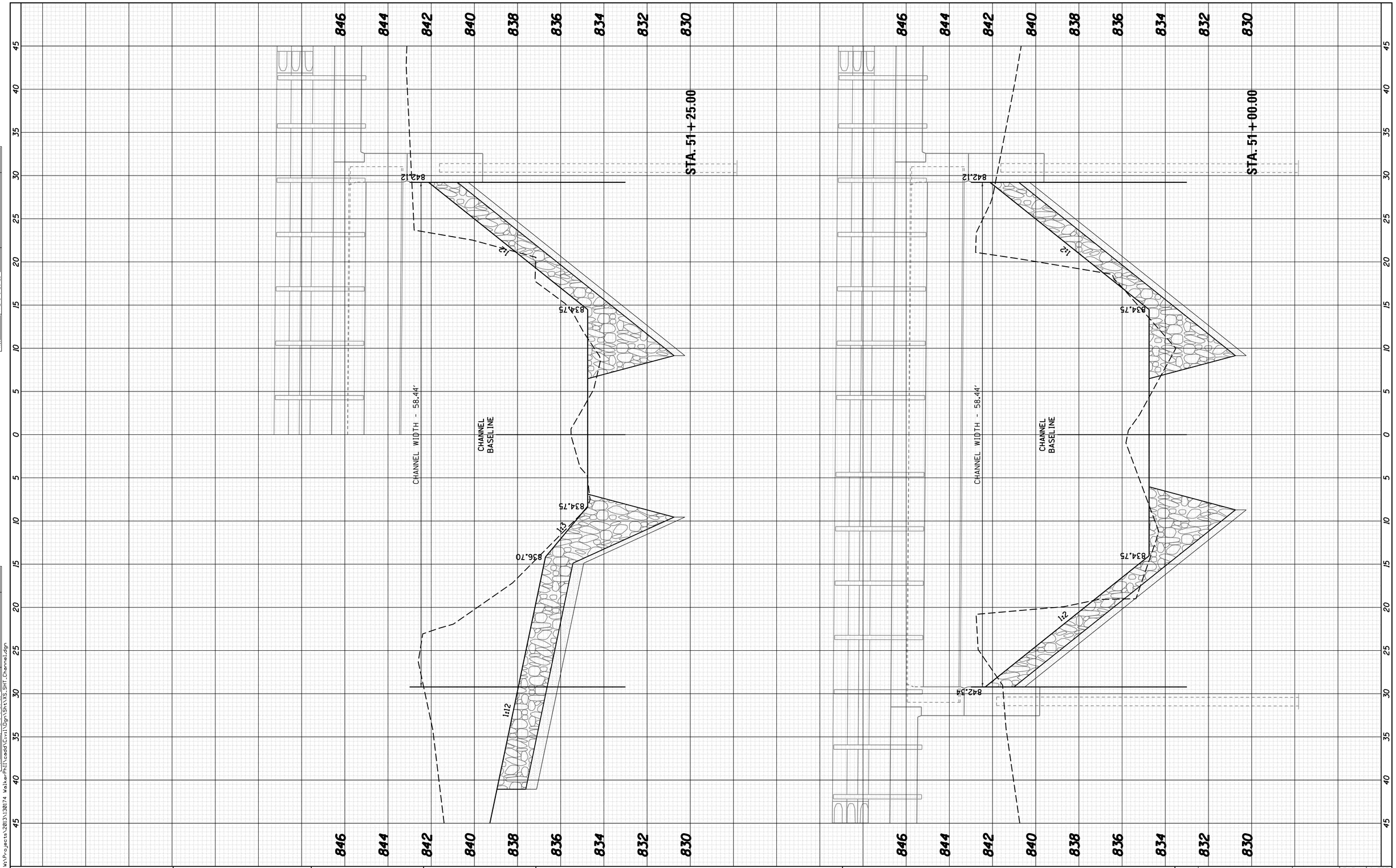

FINAL SURVEY	BY	DATE
SURVEYED		
PLOTTED		
TEMPLATE		
AREAS		
AREAS CHECKED		
NOTE BOOK		
NO.		

ORIGINAL SURVEY	BY	DATE
SURVEYED		
PLOTTED		
TEMPLATE		
AREAS		
AREAS CHECKED		
NOTE BOOK		
NO.		

FILE NAME = W:\Projects\2013\130174 WalkerPhil\cadd\Civil\Dgn\Sht\XS_SHT_Channel.dgn

WILLS BURKE KELSEY ASSOCIATES LTD.
116 West Main Street, Suite 201
St. Charles, Illinois 60174

USER NAME = nparris	DESIGNED -	REVISED -
	DRAWN -	REVISED -
PLOT SCALE = 1:5	CHECKED -	REVISED -
PLOT DATE = 9/8/2014	DATE -	REVISED -

KANE COUNTY
DIVISION OF TRANSPORTATION

CROSS SECTIONS
CHANNEL

SCALE: | SHEET NO. 2 OF 3 SHEETS | STA. | TO STA.

C.H. RTE.	SECTION	COUNTY	TOTAL SHEETS	SHEET NO.
46	08-00133-01-BR	KANE	87	66
		CONTRACT NO.XXXXXX		
	ILLINOIS	FED. AID PROJECT		

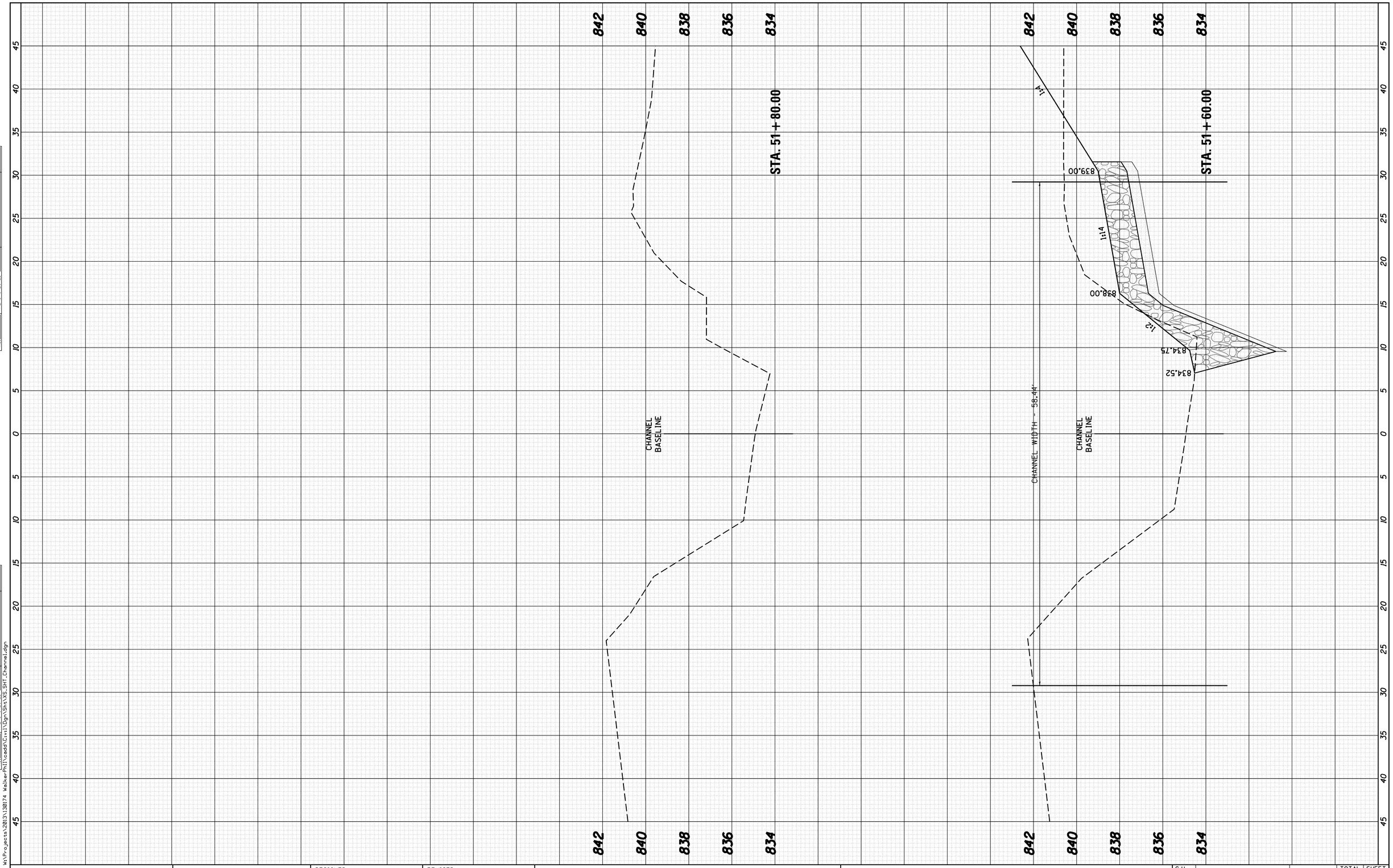

FINAL SURVEY		BY	DATE
NOTE BOOK	SURVEYED		
	PLOTTED		
	TEMPLATE		
	AREAS		
	AREAS CHECKED		
NO.			

ORIGINAL SURVEY		BY	DATE
NOTE BOOK	SURVEYED		
	PLOTTED		
	TEMPLATE		
	AREAS		
	AREAS CHECKED		
NO.			

FILE NAME = W:\Projects\2013\130174 Walker-Phil\cadd\Civil\Dgn\Sht\XS_SHT_Channel.dgn

WILLS BURKE KELSEY ASSOCIATES LTD.
116 West Main Street, Suite 201
St. Charles, Illinois 60174

USER NAME = nparris	DESIGNED -	REVISED -
	DRAWN -	REVISED -
PLOT SCALE = 1:5	CHECKED -	REVISED -
PLOT DATE = 9/8/2014	DATE -	REVISED -

KANE COUNTY
DIVISION OF TRANSPORTATION

CROSS SECTIONS
CHANNEL

SCALE: | SHEET NO. 3 OF 3 SHEETS | STA. | TO STA.

C.H. RTE.	SECTION	COUNTY	TOTAL SHEETS	SHEET NO.
46	08-00133-01-BR	KANE	87	67
		CONTRACT NO.XXXXXX		
	ILLINOIS	FED. AID PROJECT		

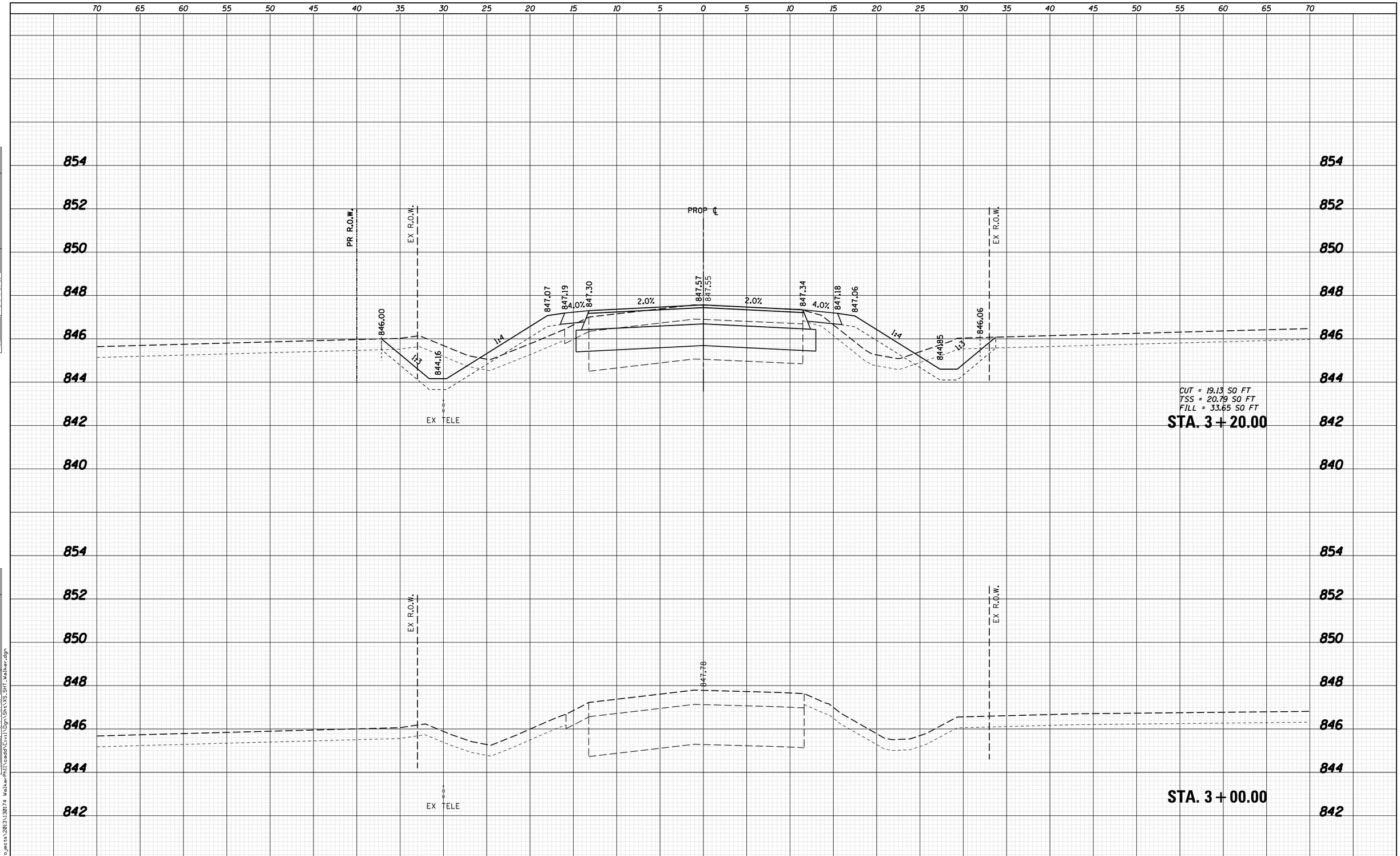

FINAL SURVEY	BY	DATE
SURVEYED		
PLOTTED		
TEMPLATE		
AREAS		
AREAS CHECKED		
NOTE BOOK NO.		

ORIGINAL SURVEY	BY	DATE
SURVEYED		
PLOTTED		
TEMPLATE		
AREAS		
AREAS CHECKED		
NOTE BOOK NO.		

FILE NAME = W:\Projects\2013\130174 WalkerPhII\cadd\Civil\Dgn\Sht\XS_SHT_walker.dgn

WILLS BURKE KELSEY ASSOCIATES LTD.
116 West Main Street, Suite 201
St. Charles, Illinois 60174

USER NAME = nparris	DESIGNED -	REVISED -
	DRAWN -	REVISED -
PLOT SCALE = 1:5	CHECKED -	REVISED -
PLOT DATE = 9/8/2014	DATE -	REVISED -

STATE OF ILLINOIS
DEPARTMENT OF TRANSPORTATION

CROSS SECTIONS
WALKER ROAD

SCALE: 5H:2V | SHEET NO. OF SHEETS | STA. 3+00.00 TO STA. 3+20.00

C.H. RTE.	SECTION	COUNTY	TOTAL SHEETS	SHEET NO.
46	08-00133-01-BR	KANE	87	68

CONTRACT NO.

ILLINOIS FED. AID PROJECT

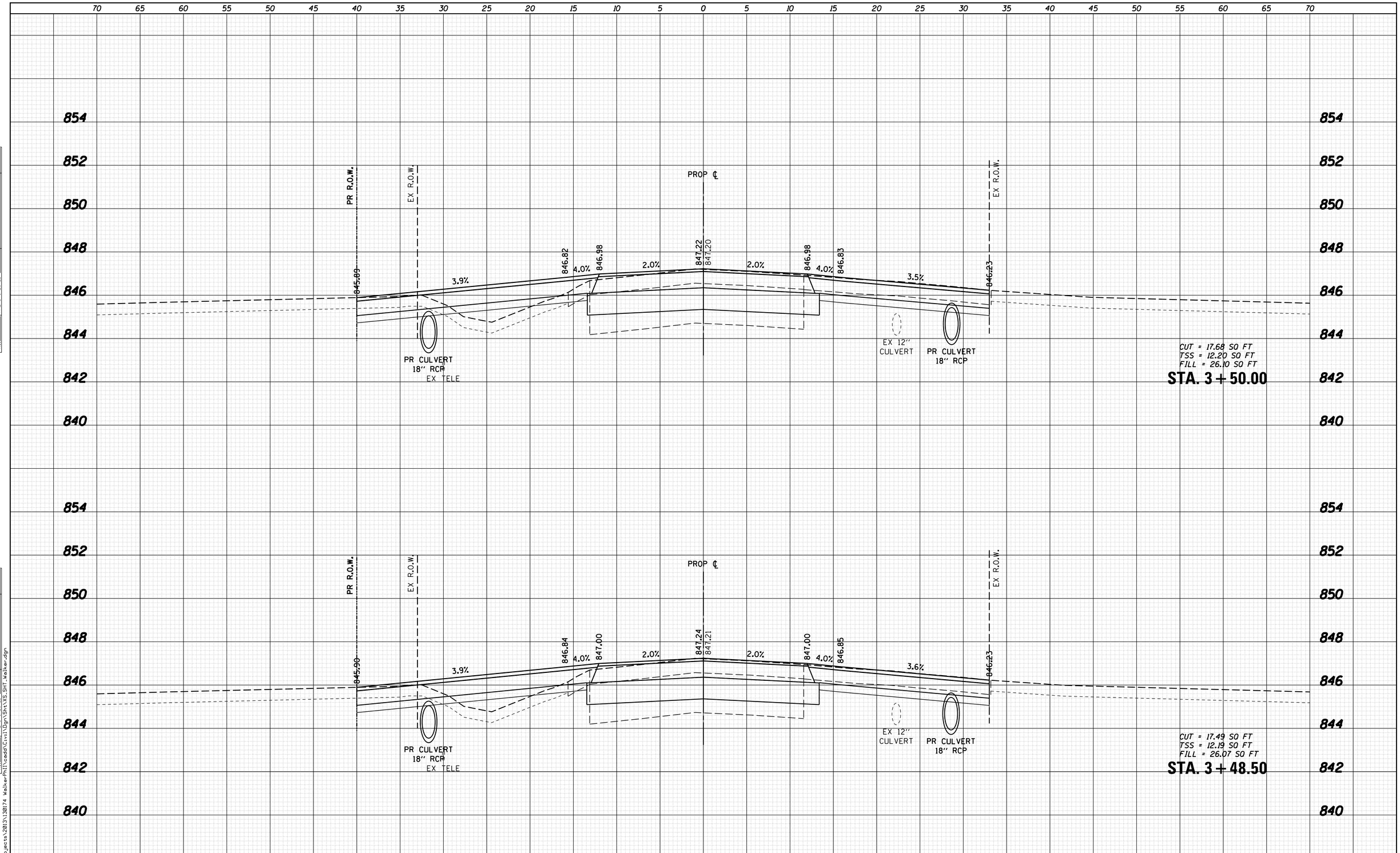

FINAL SURVEY		BY	DATE
NOTE BOOK	SURVEYED		
	PLOTTED		
	TEMPLATE		
	AREAS		
NO.	AREAS CHECKED		

ORIGINAL SURVEY		BY	DATE
NOTE BOOK	SURVEYED		
	PLOTTED		
	TEMPLATE		
	AREAS		
NO.	AREAS CHECKED		

FILE NAME = W:\Projects\2013\130174 WalkerPhil\cadd\Civil\Dgn\Sht\XS_SHT_walker.dgn

WILLS BURKE KELSEY ASSOCIATES LTD.
116 West Main Street, Suite 201
St. Charles, Illinois 60174

USER NAME = nparris	DESIGNED -	REVISED -
	DRAWN -	REVISED -
PLOT SCALE = 1:5	CHECKED -	REVISED -
PLOT DATE = 9/8/2014	DATE -	REVISED -

STATE OF ILLINOIS
DEPARTMENT OF TRANSPORTATION

CROSS SECTIONS
WALKER ROAD

SCALE: 5H:2V | SHEET NO. OF SHEETS | STA. 3+48.50 TO STA. 3+50.00

C.H. RTE.	SECTION	COUNTY	TOTAL SHEETS	SHEET NO.
46	08-00133-01-BR	KANE	87	69

CONTRACT NO.

ILLINOIS FED. AID PROJECT

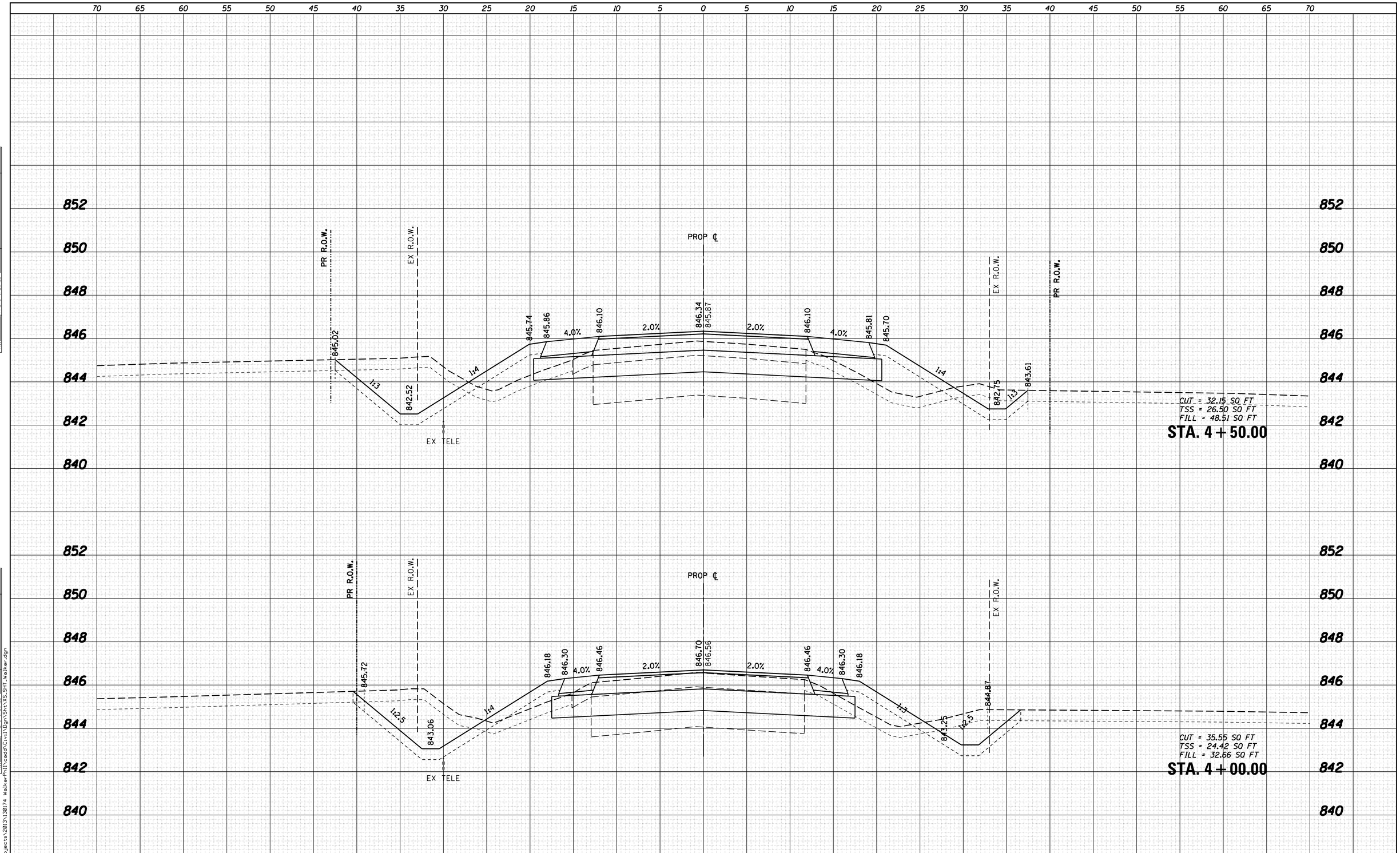

FINAL SURVEY	BY	DATE
SURVEYED		
PLOTTED		
TEMPLATE		
AREAS		
AREAS CHECKED		
NOTE BOOK NO.		

ORIGINAL SURVEY	BY	DATE
SURVEYED		
PLOTTED		
TEMPLATE		
AREAS		
AREAS CHECKED		
NOTE BOOK NO.		

FILE NAME = W:\Projects\2013\130174 WalkerPhII\cadd\Civil\Dgn\Sht\XS_SHT_walker.dgn

WILLS BURKE KELSEY ASSOCIATES LTD.
116 West Main Street, Suite 201
St. Charles, Illinois 60174

USER NAME = nparris	DESIGNED -	REVISED -
	DRAWN -	REVISED -
PLOT SCALE = 1:5	CHECKED -	REVISED -
PLOT DATE = 9/8/2014	DATE -	REVISED -

STATE OF ILLINOIS
DEPARTMENT OF TRANSPORTATION

CROSS SECTIONS
WALKER ROAD

SCALE: 5H:2V | SHEET NO. OF SHEETS | STA. 4+00.00 TO STA. 4+50.00

C.H. RTE.	SECTION	COUNTY	TOTAL SHEETS	SHEET NO.
46	08-00133-01-BR	KANE	87	70

CONTRACT NO.

ILLINOIS FED. AID PROJECT

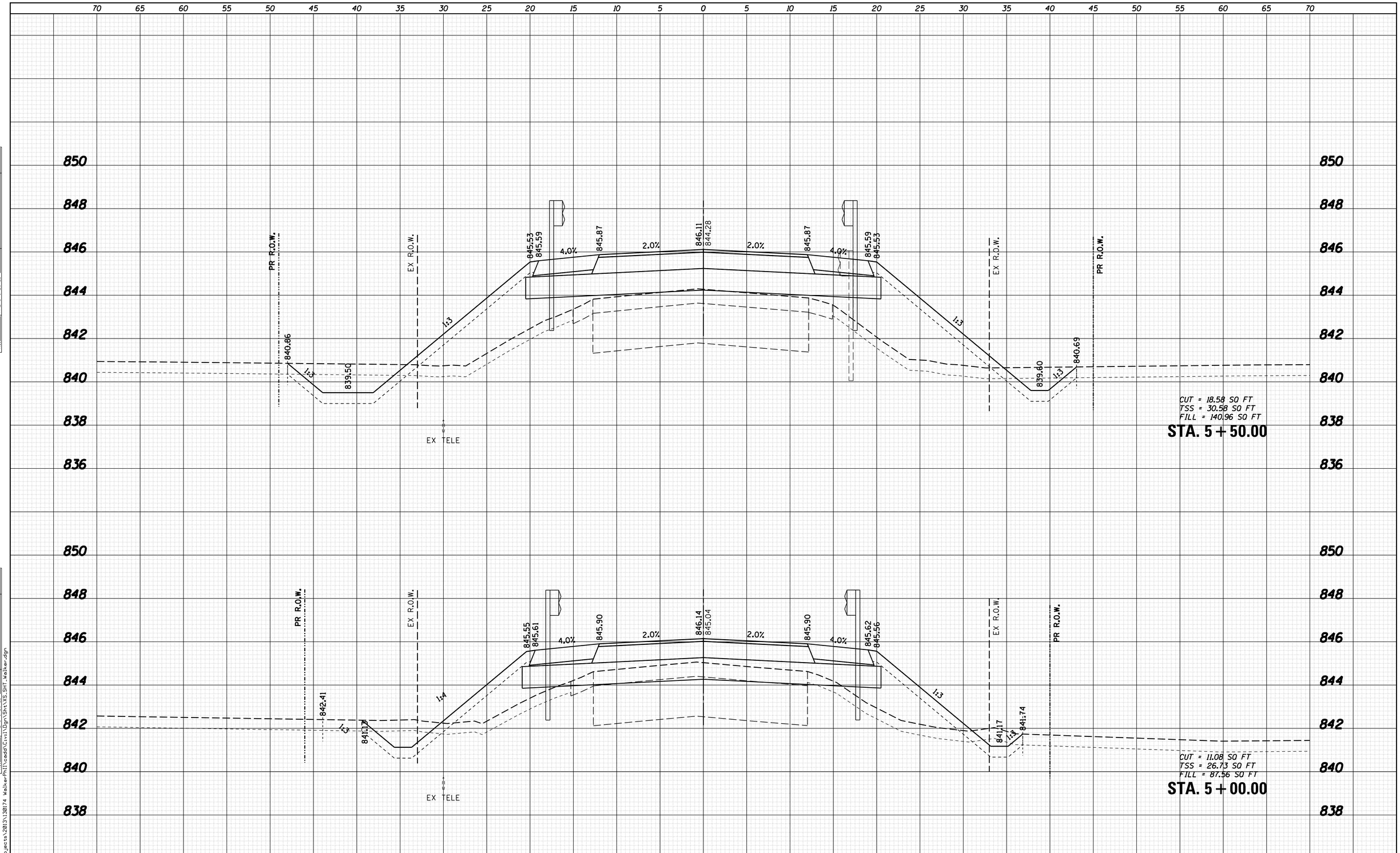

FINAL SURVEY	BY	DATE
SURVEYED		
PLOTTED		
TEMPLATE		
AREAS		
AREAS CHECKED		
NOTE BOOK NO.		

ORIGINAL SURVEY	BY	DATE
SURVEYED		
PLOTTED		
TEMPLATE		
AREAS		
AREAS CHECKED		
NOTE BOOK NO.		

FILE NAME = W:\Projects\2013\130174 WalkerPhil\cadd\Civil\Dgn\Sht\XS_SHT_walker.dgn

WILLS BURKE KELSEY ASSOCIATES LTD.
116 West Main Street, Suite 201
St. Charles, Illinois 60174

USER NAME = nparris	DESIGNED -	REVISED -
	DRAWN -	REVISED -
PLOT SCALE = 1:5	CHECKED -	REVISED -
PLOT DATE = 9/8/2014	DATE -	REVISED -

STATE OF ILLINOIS
DEPARTMENT OF TRANSPORTATION

CROSS SECTIONS
WALKER ROAD

SCALE: 5H:2V | SHEET NO. OF SHEETS | STA. 5+00.00 TO STA. 5+50.00

C.H. RTE.	SECTION	COUNTY	TOTAL SHEETS	SHEET NO.
46	08-00133-01-BR	KANE	87	71

CONTRACT NO.

ILLINOIS FED. AID PROJECT

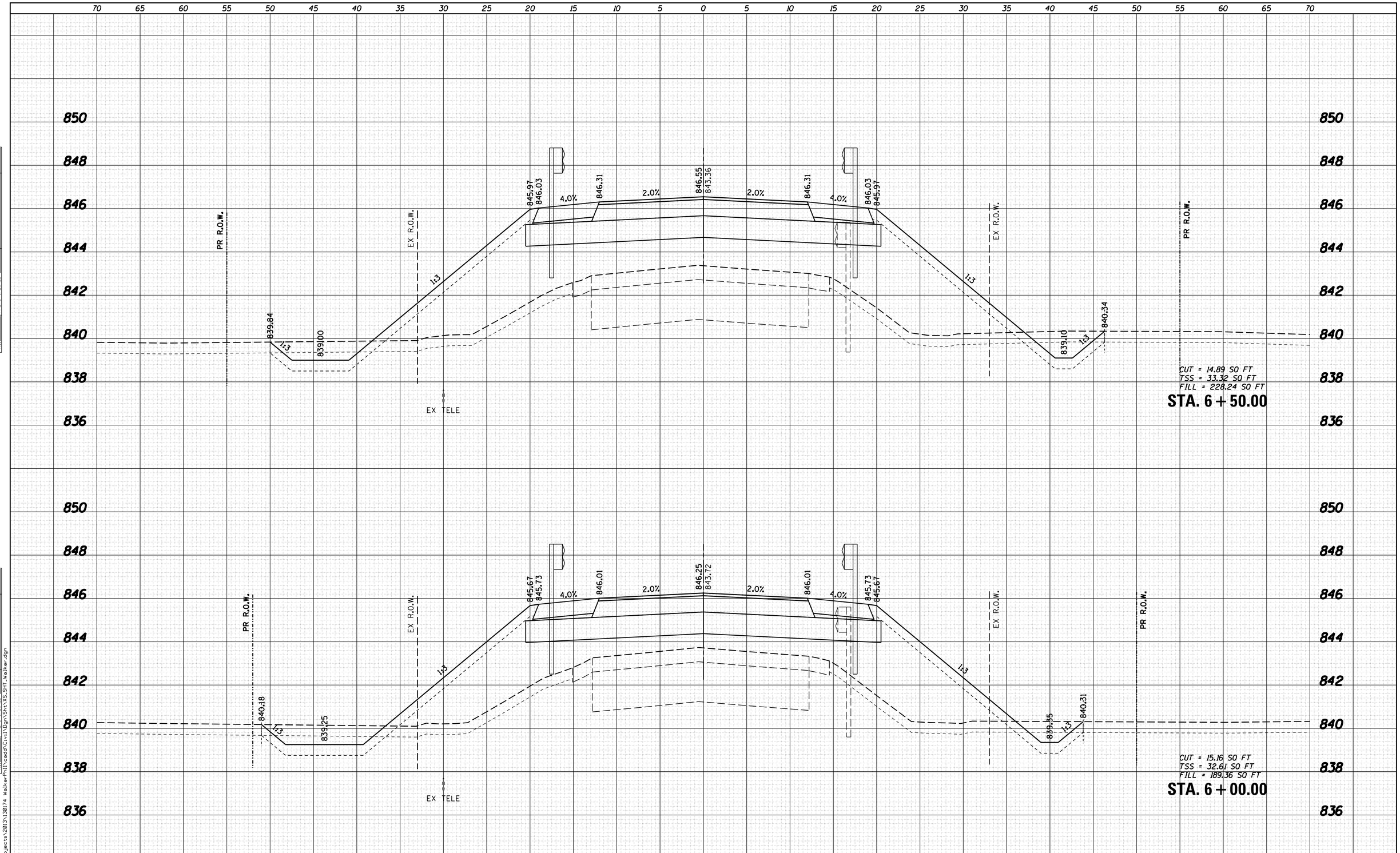

FINAL SURVEY	BY	DATE
SURVEYED		
PLOTTED		
TEMPLATE		
AREAS		
AREAS CHECKED		
NOTE BOOK NO.		

ORIGINAL SURVEY	BY	DATE
SURVEYED		
PLOTTED		
TEMPLATE		
AREAS		
AREAS CHECKED		
NOTE BOOK NO.		

FILE NAME = W:\Projects\2013\130174 WalkerPhII\cadd\Civil\Dgn\Sht\XS_SHT_walker.dgn

WILLS BURKE KELSEY ASSOCIATES LTD.
116 West Main Street, Suite 201
St. Charles, Illinois 60174

USER NAME = nparris	DESIGNED -	REVISED -
	DRAWN -	REVISED -
PLOT SCALE = 1:5	CHECKED -	REVISED -
PLOT DATE = 9/8/2014	DATE -	REVISED -

STATE OF ILLINOIS
DEPARTMENT OF TRANSPORTATION

CROSS SECTIONS
WALKER ROAD

SCALE: 5H:2V | SHEET NO. OF SHEETS | STA. 6+00.00 TO STA. 6+50.00

C.H. RTE.	SECTION	COUNTY	TOTAL SHEETS	SHEET NO.
46	08-00133-01-BR	KANE	87	72

CONTRACT NO.

ILLINOIS FED. AID PROJECT

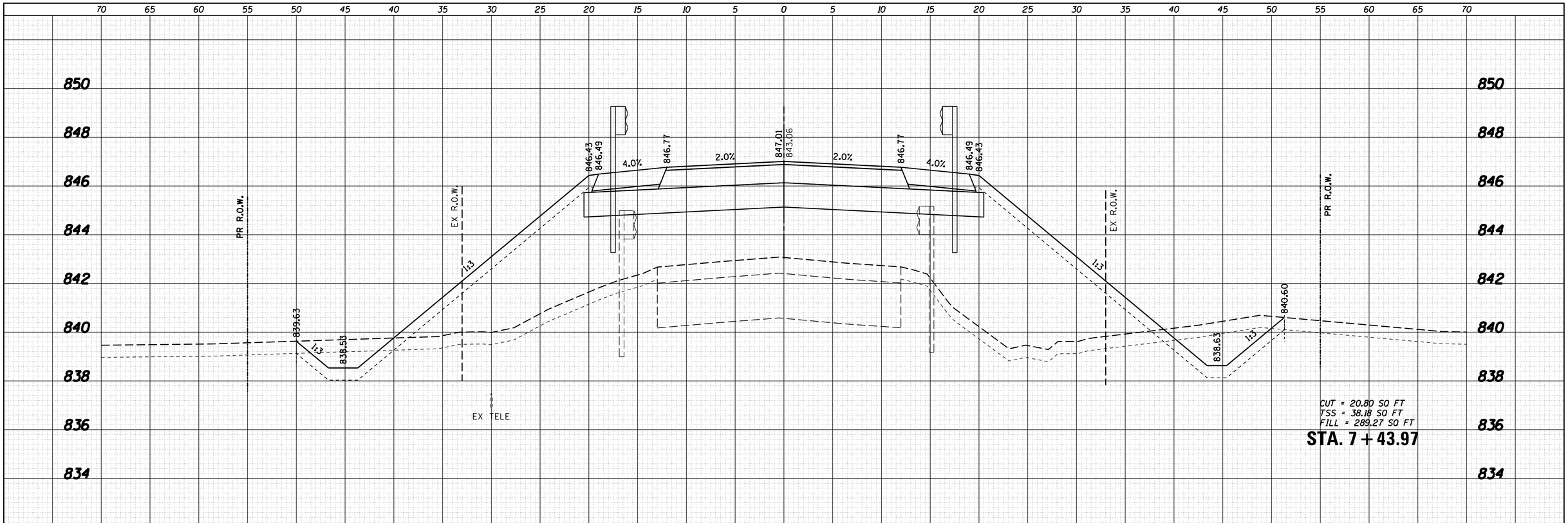

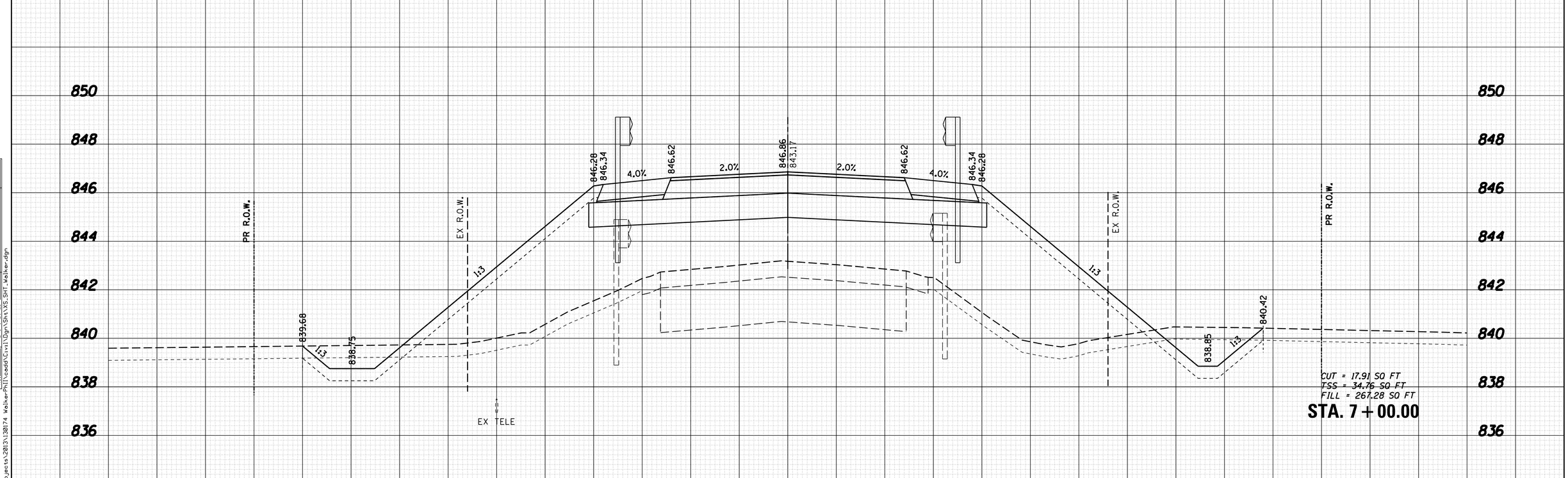

FINAL SURVEY		BY	DATE
NOTE BOOK	SURVEYED		
	PLOTTED		
	TEMPLATE		
	AREAS		
NO.	AREAS CHECKED		

ORIGINAL SURVEY		BY	DATE
NOTE BOOK	SURVEYED		
	PLOTTED		
	TEMPLATE		
	AREAS		
NO.	AREAS CHECKED		

FILE NAME = W:\Projects\2013\130174 WalkerPhil\cadd\Civil\Dgn\Sht\XS_SHT_walker.dgn

WILLS BURKE KELSEY ASSOCIATES LTD.
116 West Main Street, Suite 201
St. Charles, Illinois 60174

USER NAME = nparris	DESIGNED -	REVISED -
	DRAWN -	REVISED -
PLOT SCALE = 1:5	CHECKED -	REVISED -
PLOT DATE = 9/8/2014	DATE -	REVISED -

STATE OF ILLINOIS
DEPARTMENT OF TRANSPORTATION

CROSS SECTIONS
WALKER ROAD

SCALE: 5H:2V | SHEET NO. OF SHEETS | STA. 7+00.00 TO STA. 7+43.97

C.H. RTE.	SECTION	COUNTY	TOTAL SHEETS	SHEET NO.
46	08-00133-01-BR	KANE	87	73

CONTRACT NO.

ILLINOIS FED. AID PROJECT

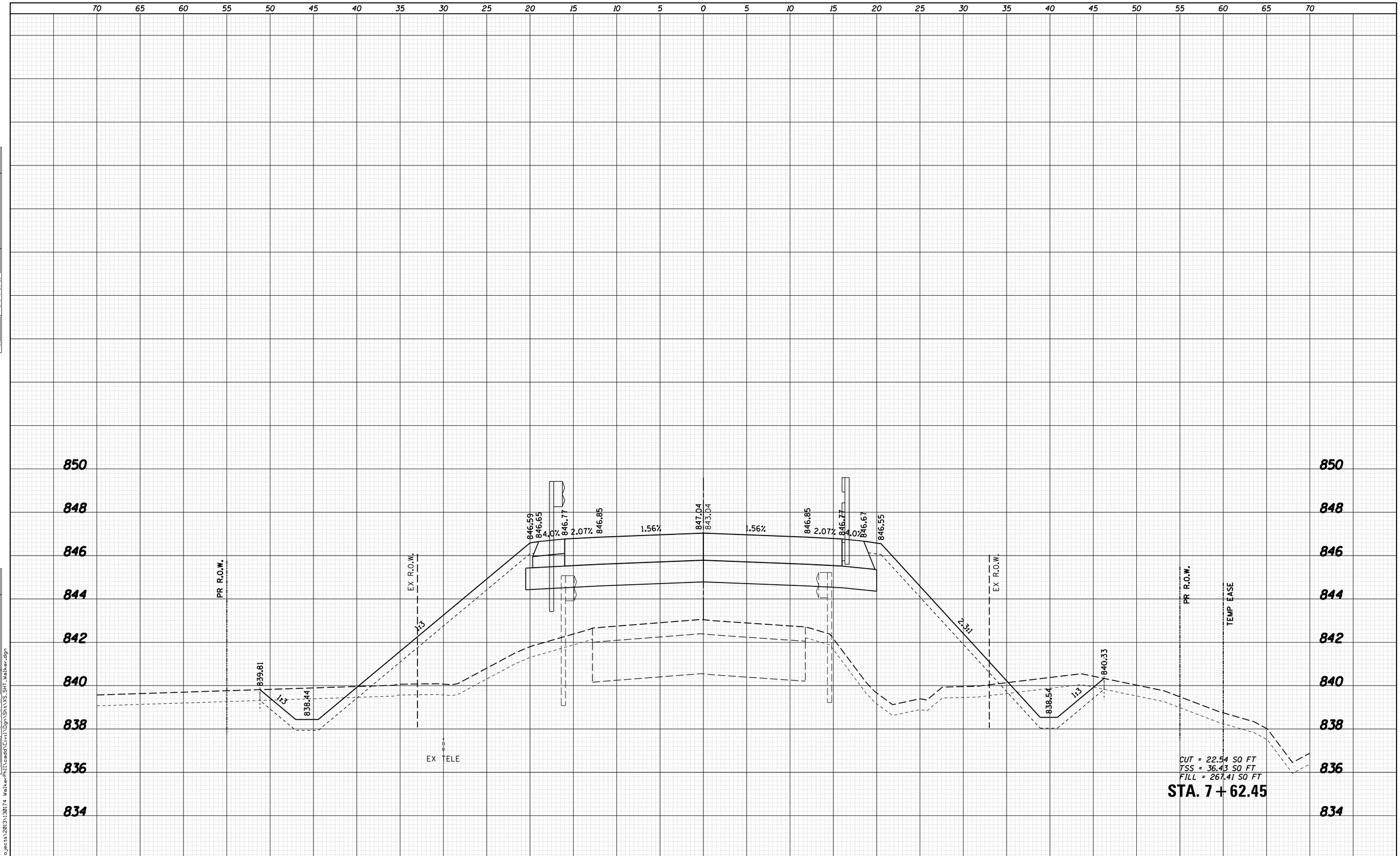

FINAL SURVEY — NOTE BOOK NO. — SURVEYED / PLOTTED / TEMPLATE / AREAS / AREAS CHECKED — BY — DATE

ORIGINAL SURVEY — NOTE BOOK NO. — SURVEYED / PLOTTED / TEMPLATE / AREAS / AREAS CHECKED — BY — DATE

FILE NAME = W:\Projects\2013\130174 WalkerPhil\cadd\Civil\Dgn\Sht\XS_SHT_walker.dgn

WILLS BURKE KELSEY ASSOCIATES LTD.
116 West Main Street, Suite 201
St. Charles, Illinois 60174

USER NAME = nparris	DESIGNED -	REVISED -
	DRAWN -	REVISED -
PLOT SCALE = 1:5	CHECKED -	REVISED -
PLOT DATE = 9/8/2014	DATE -	REVISED -

STATE OF ILLINOIS
DEPARTMENT OF TRANSPORTATION

CROSS SECTIONS
WALKER ROAD

SCALE: 5H:2V | SHEET NO. OF SHEETS | STA. 7+62.45 TO STA. 7+62.45

C.H. RTE.	SECTION	COUNTY	TOTAL SHEETS	SHEET NO.
46	08-00133-01-BR	KANE	87	74

CONTRACT NO.

ILLINOIS FED. AID PROJECT

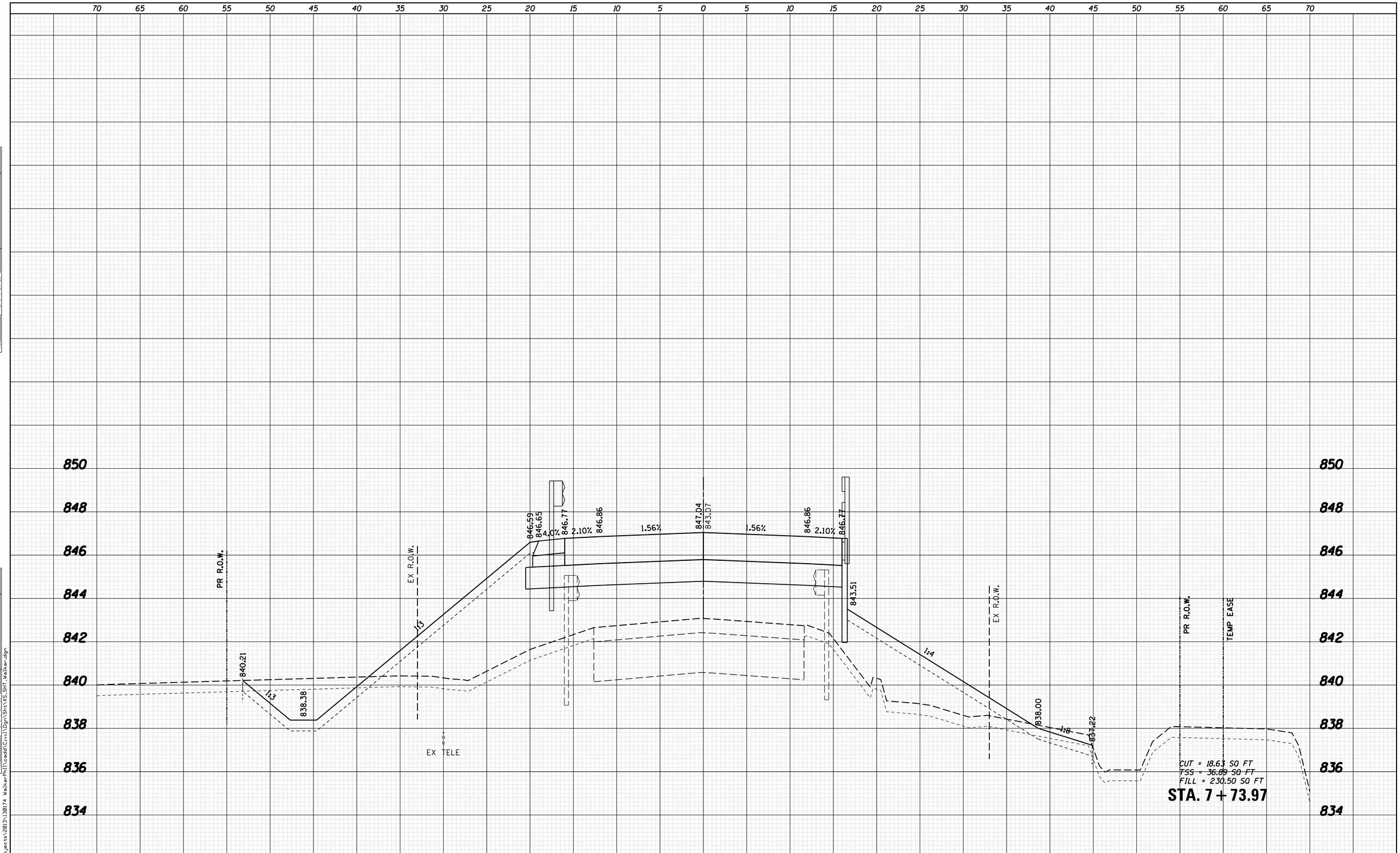

FINAL SURVEY		BY	DATE
NOTE BOOK NO.	SURVEYED		
	PLOTTED		
	TEMPLATE		
	AREAS		
	AREAS CHECKED		

ORIGINAL SURVEY		BY	DATE
NOTE BOOK NO.	SURVEYED		
	PLOTTED		
	TEMPLATE		
	AREAS		
	AREAS CHECKED		

FILE NAME = W:\Projects\2013\130174 WalkerPhII\cadd\Civil\Dgn\Sht\XS_SHT_walker.dgn

WILLS BURKE KELSEY ASSOCIATES LTD.
116 West Main Street, Suite 201
St. Charles, Illinois 60174

USER NAME = nparris	DESIGNED -	REVISED -
	DRAWN -	REVISED -
PLOT SCALE = 1:5	CHECKED -	REVISED -
PLOT DATE = 9/8/2014	DATE -	REVISED -

STATE OF ILLINOIS
DEPARTMENT OF TRANSPORTATION

CROSS SECTIONS
WALKER ROAD

SCALE: 5H:2V | SHEET NO. OF SHEETS | STA. 7+73.97 TO STA. 7+73.97

C.H. RTE.	SECTION	COUNTY	TOTAL SHEETS	SHEET NO.
46	08-00133-01-BR	KANE	87	75

CONTRACT NO.

ILLINOIS FED. AID PROJECT

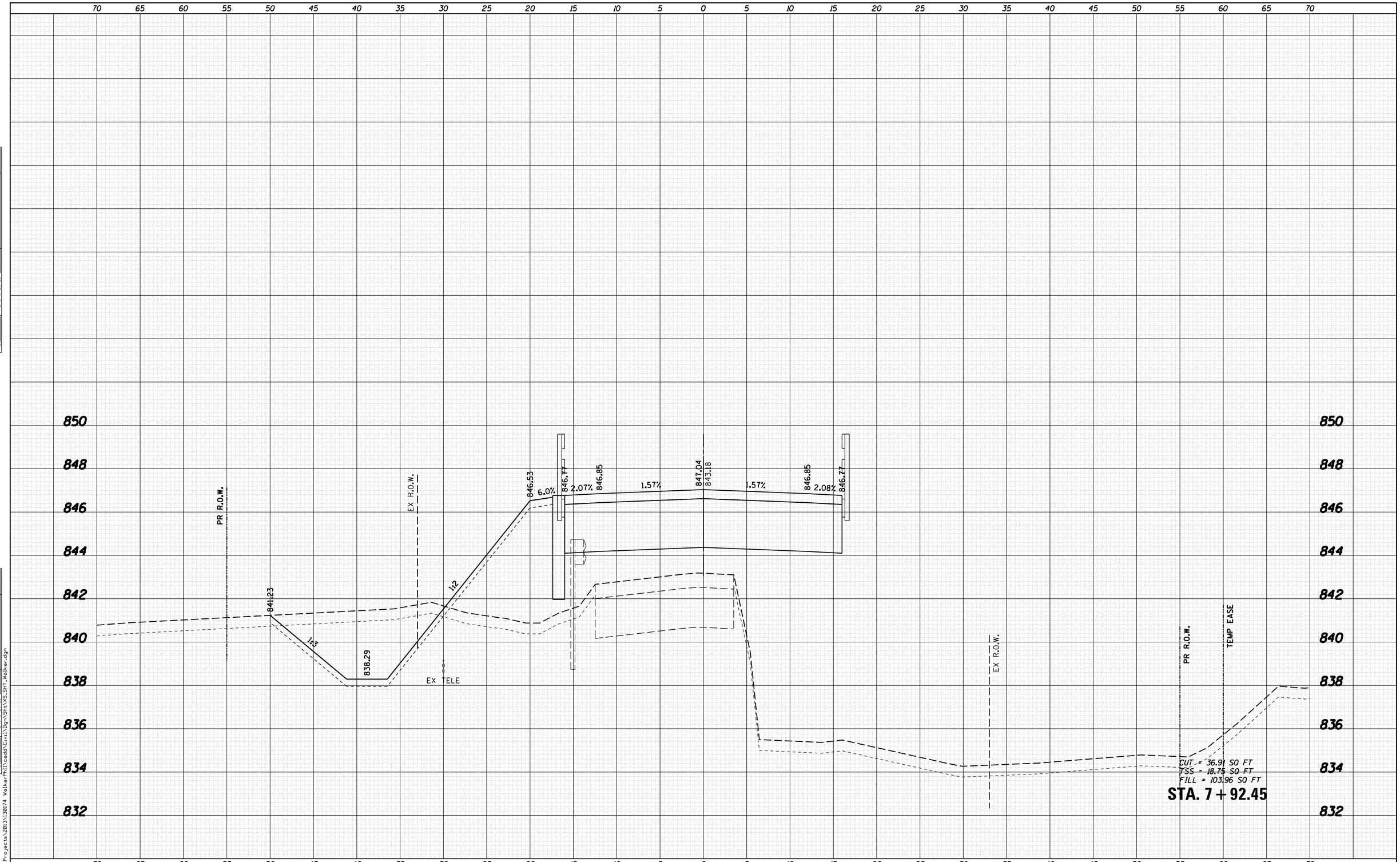

FINAL SURVEY		BY	DATE
NOTE BOOK	SURVEYED		
	PLOTTED		
	TEMPLATE		
	AREAS		
NO.	AREAS CHECKED		

ORIGINAL SURVEY		BY	DATE
NOTE BOOK	SURVEYED		
	PLOTTED		
	TEMPLATE		
	AREAS		
NO.	AREAS CHECKED		

FILE NAME = W:\Projects\2013\30174 Walker\Phil\cadd\Civil\Dgn\Sht\XS_SHT_Walker.dgn

WILLS BURKE KELSEY ASSOCIATES LTD.
116 West Main Street, Suite 201
St. Charles, Illinois 60174

USER NAME = nparris	DESIGNED -	REVISED -
	DRAWN -	REVISED -
PLOT SCALE = 1:5	CHECKED -	REVISED -
PLOT DATE = 9/8/2014	DATE -	REVISED -

STATE OF ILLINOIS
DEPARTMENT OF TRANSPORTATION

CROSS SECTIONS
WALKER ROAD

SCALE: 5H:2V | SHEET NO. OF SHEETS | STA. 7+92.45 TO STA. 7+92.45

C.H. RTE.	SECTION	COUNTY	TOTAL SHEETS	SHEET NO.
46	08-00133-01-BR	KANE	87	76

CONTRACT NO.

ILLINOIS FED. AID PROJECT

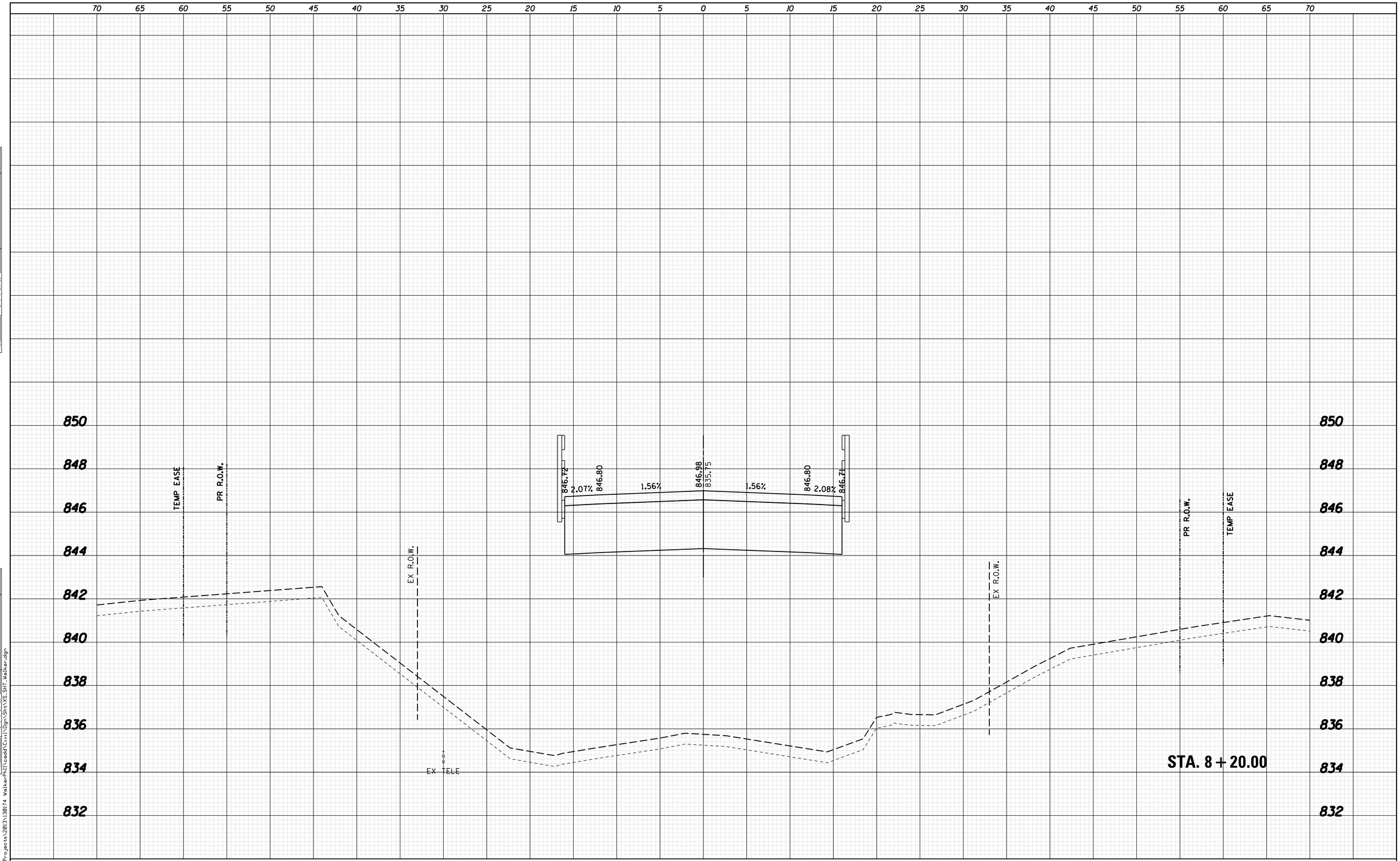

FINAL SURVEY		BY	DATE
NOTE BOOK	SURVEYED		
	PLOTTED		
	TEMPLATE		
	AREAS		
NO.	AREAS CHECKED		

ORIGINAL SURVEY		BY	DATE
NOTE BOOK	SURVEYED		
	PLOTTED		
	TEMPLATE		
	AREAS		
NO.	AREAS CHECKED		

FILE NAME = W:\Projects\2013\130174 WalkerPhII\cadd\Civil\Dgn\Sht\XS_SHT_Walker.dgn

WILLS BURKE KELSEY ASSOCIATES LTD.
116 West Main Street, Suite 201
St. Charles, Illinois 60174

USER NAME = nparris	DESIGNED -	REVISED -
	DRAWN -	REVISED -
PLOT SCALE = 1:5	CHECKED -	REVISED -
PLOT DATE = 9/8/2014	DATE -	REVISED -

STATE OF ILLINOIS
DEPARTMENT OF TRANSPORTATION

CROSS SECTIONS
WALKER ROAD

SCALE: 5H:2V | SHEET NO. OF SHEETS | STA. 8+20.00 TO STA. 8+20.00

C.H. RTE.	SECTION	COUNTY	TOTAL SHEETS	SHEET NO.
46	08-00133-01-BR	KANE	87	77

CONTRACT NO.

ILLINOIS FED. AID PROJECT

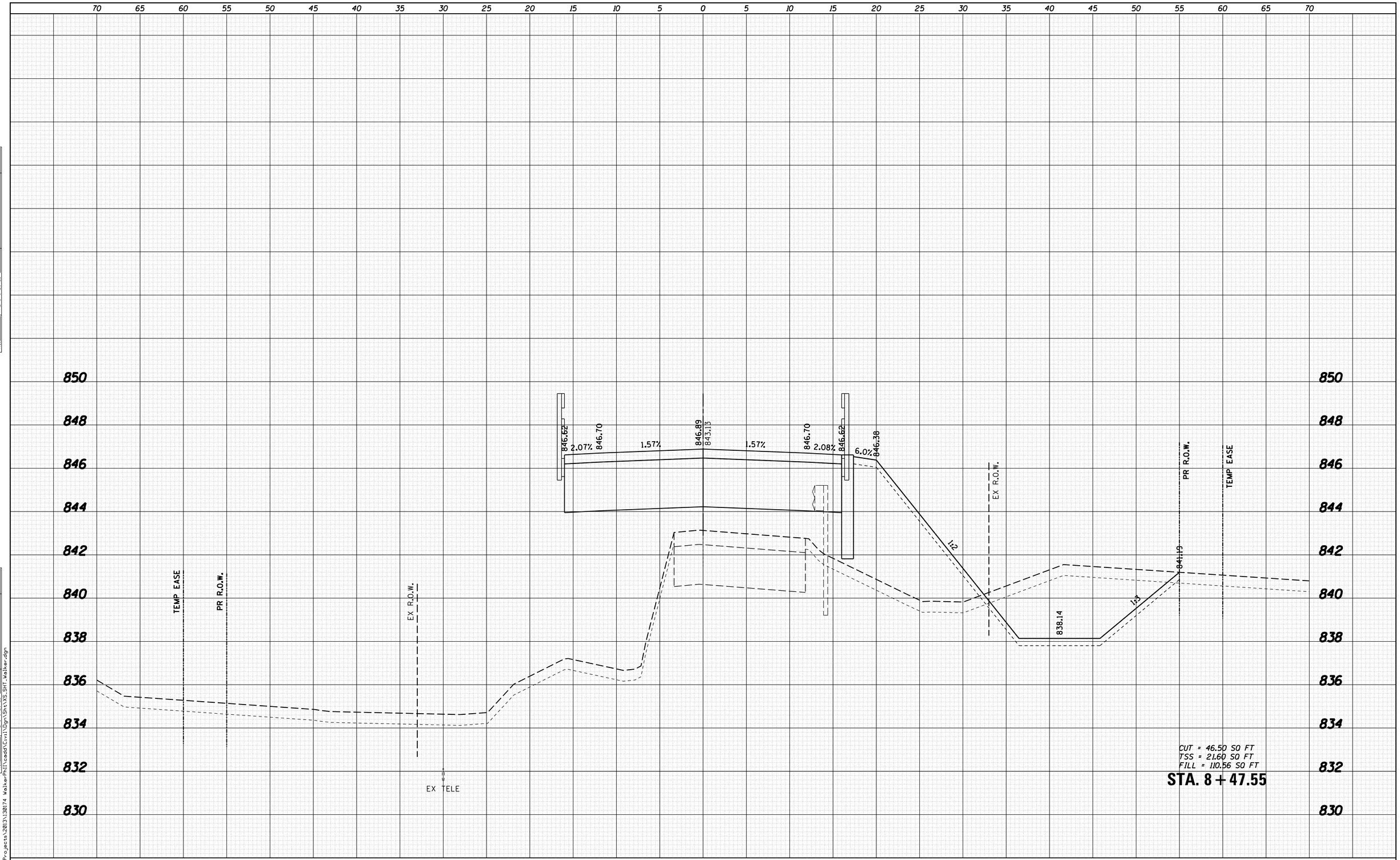

FINAL SURVEY		BY	DATE
NOTE BOOK	SURVEYED		
	PLOTTED		
	TEMPLATE		
	AREAS		
NO.	AREAS CHECKED		

ORIGINAL SURVEY		BY	DATE
NOTE BOOK	SURVEYED		
	PLOTTED		
	TEMPLATE		
	AREAS		
NO.	AREAS CHECKED		

FILE NAME = W:\Projects\2013\130174 Walker\Phil\cadd\Civil\Dgn\Sht\XS_SHT_Walker.dgn

WILLS BURKE KELSEY ASSOCIATES LTD.
116 West Main Street, Suite 201
St. Charles, Illinois 60174

USER NAME = nparris	DESIGNED -	REVISED -
	DRAWN -	REVISED -
PLOT SCALE = 1:5	CHECKED -	REVISED -
PLOT DATE = 9/8/2014	DATE -	REVISED -

STATE OF ILLINOIS
DEPARTMENT OF TRANSPORTATION

CROSS SECTIONS
WALKER ROAD

SCALE: 5H:2V | SHEET NO. OF SHEETS | STA. 8+47.55 TO STA. 8+47.55

C.H. RTE.	SECTION	COUNTY	TOTAL SHEETS	SHEET NO.
46	08-00133-01-BR	KANE	87	78
		CONTRACT NO.		
		ILLINOIS FED. AID PROJECT		

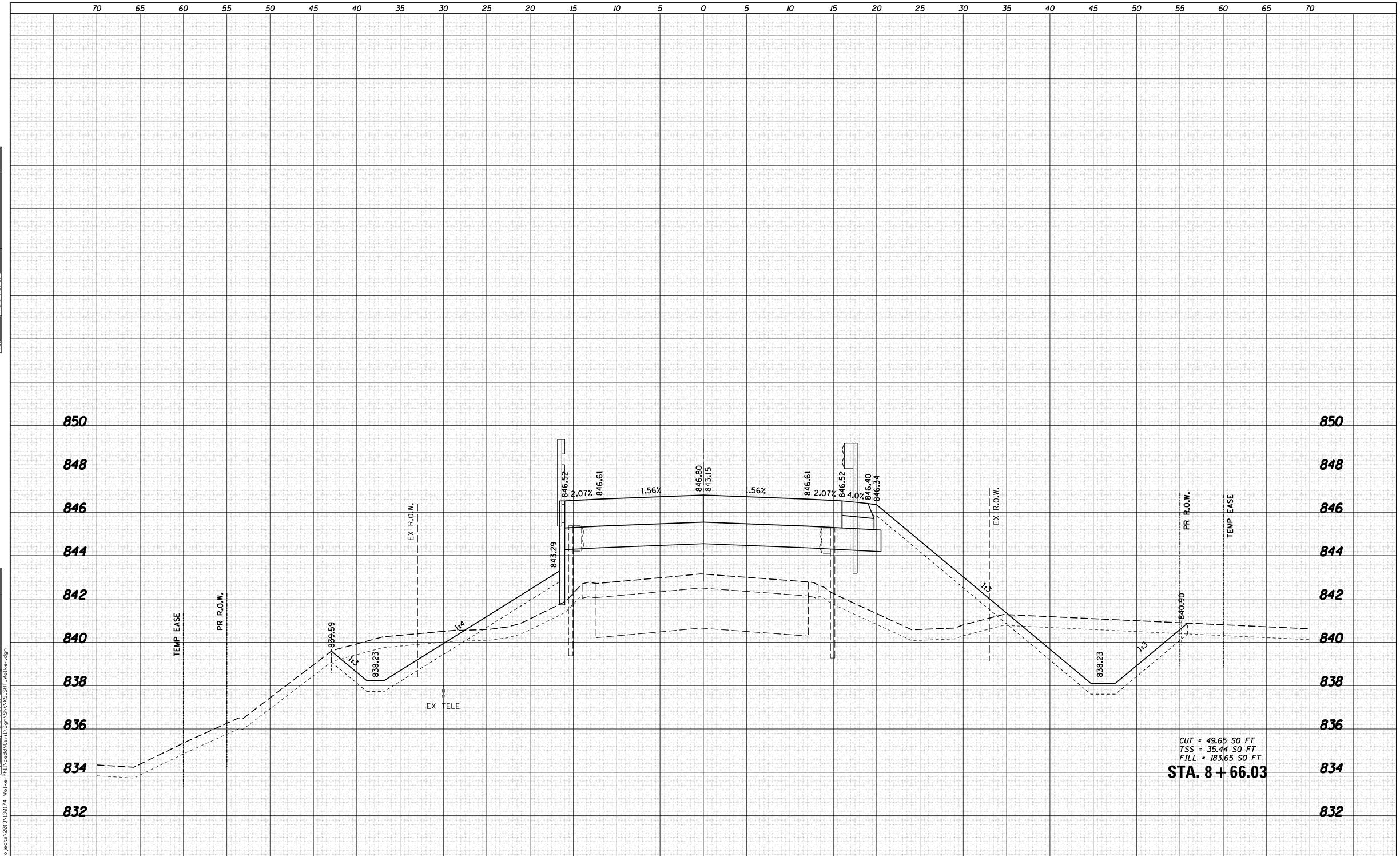

FINAL SURVEY		BY	DATE
NOTE BOOK NO.	SURVEYED		
	PLOTTED		
	TEMPLATE		
	AREAS		
	AREAS CHECKED		

ORIGINAL SURVEY		BY	DATE
NOTE BOOK NO.	SURVEYED		
	PLOTTED		
	TEMPLATE		
	AREAS		
	AREAS CHECKED		

FILE NAME = W:\Projects\2013\130174 WalkerPhI\cadd\Civil\Dgn\Sht\XS_SHT_Walker.dgn

WBK WILLS BURKE KELSEY ASSOCIATES LTD.
116 West Main Street, Suite 201
St. Charles, Illinois 60174

USER NAME = nparris	DESIGNED -	REVISED -
	DRAWN -	REVISED -
PLOT SCALE = 1:5	CHECKED -	REVISED -
PLOT DATE = 9/8/2014	DATE -	REVISED -

STATE OF ILLINOIS
DEPARTMENT OF TRANSPORTATION

CROSS SECTIONS
WALKER ROAD

SCALE: 5H:2V | SHEET NO. OF SHEETS | STA. 8+66.03 TO STA. 8+66.03

C.H. RTE.	SECTION	COUNTY	TOTAL SHEETS	SHEET NO.
46	08-00133-01-BR	KANE	87	79

CONTRACT NO.

ILLINOIS FED. AID PROJECT

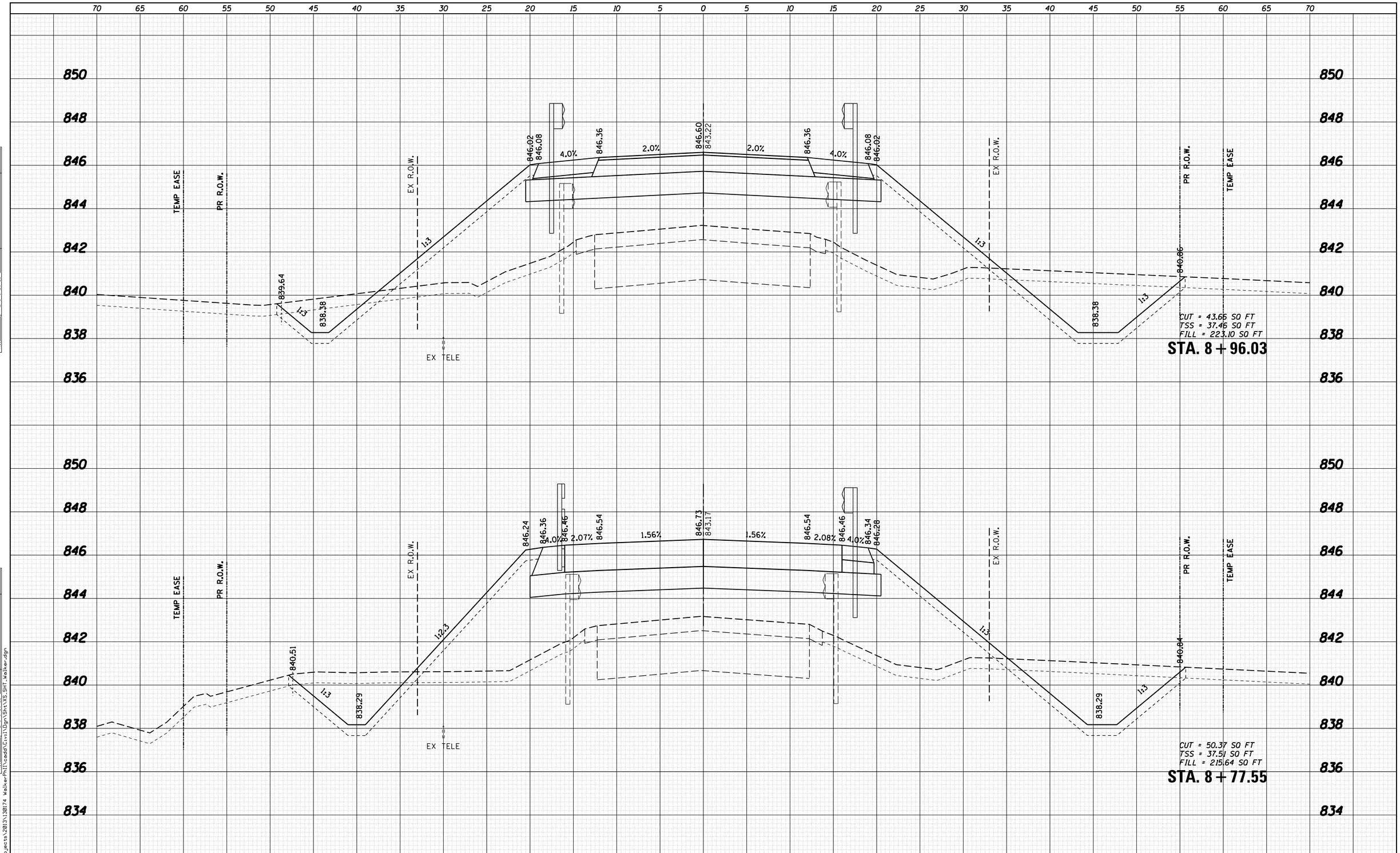

FINAL SURVEY	BY	DATE
SURVEYED		
PLOTTED		
TEMPLATE		
AREAS		
AREAS CHECKED		
NOTE BOOK NO.		

ORIGINAL SURVEY	BY	DATE
SURVEYED		
PLOTTED		
TEMPLATE		
AREAS		
AREAS CHECKED		
NOTE BOOK NO.		

FILE NAME = W:\Projects\2013\130174 WalkerPhII\cadd\Civil\Dgn\Sht\XS_SHT_walker.dgn

WILLS BURKE KELSEY ASSOCIATES LTD.
116 West Main Street, Suite 201
St. Charles, Illinois 60174

USER NAME = nparris	DESIGNED -	REVISED -
	DRAWN -	REVISED -
PLOT SCALE = 1:5	CHECKED -	REVISED -
PLOT DATE = 9/8/2014	DATE -	REVISED -

STATE OF ILLINOIS
DEPARTMENT OF TRANSPORTATION

CROSS SECTIONS
WALKER ROAD

SCALE: 5H:2V | SHEET NO. OF SHEETS | STA. 8+77.55 TO STA. 8+96.03

C.H. RTE.	SECTION	COUNTY	TOTAL SHEETS	SHEET NO.
46	08-00133-01-BR	KANE	87	80

CONTRACT NO.

ILLINOIS FED. AID PROJECT

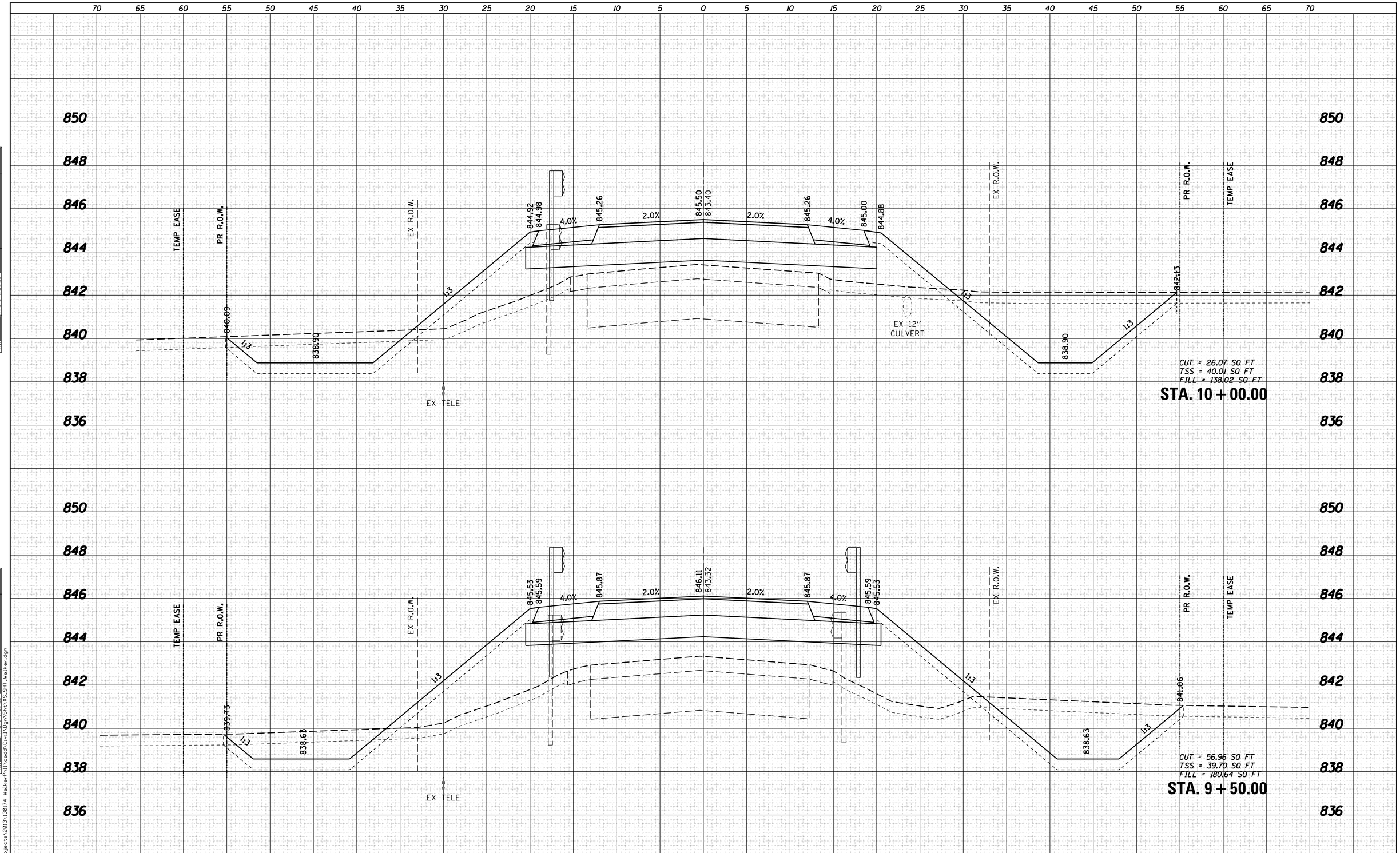

FINAL SURVEY	BY	DATE
SURVEYED		
PLOTTED		
TEMPLATE		
AREAS		
AREAS CHECKED		
NOTE BOOK		
NO.		

ORIGINAL SURVEY	BY	DATE
SURVEYED		
PLOTTED		
TEMPLATE		
AREAS		
AREAS CHECKED		
NOTE BOOK		
NO.		

FILE NAME = W:\Projects\2013\130174 WalkerPhil\cadd\Civil\Dgn\Sht\XS-SHT_walker.dgn

WILLS BURKE KELSEY ASSOCIATES LTD.
116 West Main Street, Suite 201
St. Charles, Illinois 60174

USER NAME = nparris	DESIGNED -	REVISED -
	DRAWN -	REVISED -
PLOT SCALE = 1:5	CHECKED -	REVISED -
PLOT DATE = 9/8/2014	DATE -	REVISED -

STATE OF ILLINOIS
DEPARTMENT OF TRANSPORTATION

CROSS SECTIONS
WALKER ROAD

SCALE: 5H:2V | SHEET NO. OF SHEETS | STA. 9+50.00 TO STA. 10+00.00

C.H. RTE.	SECTION	COUNTY	TOTAL SHEETS	SHEET NO.
46	08-00133-01-BR	KANE	87	81

CONTRACT NO.

ILLINOIS FED. AID PROJECT

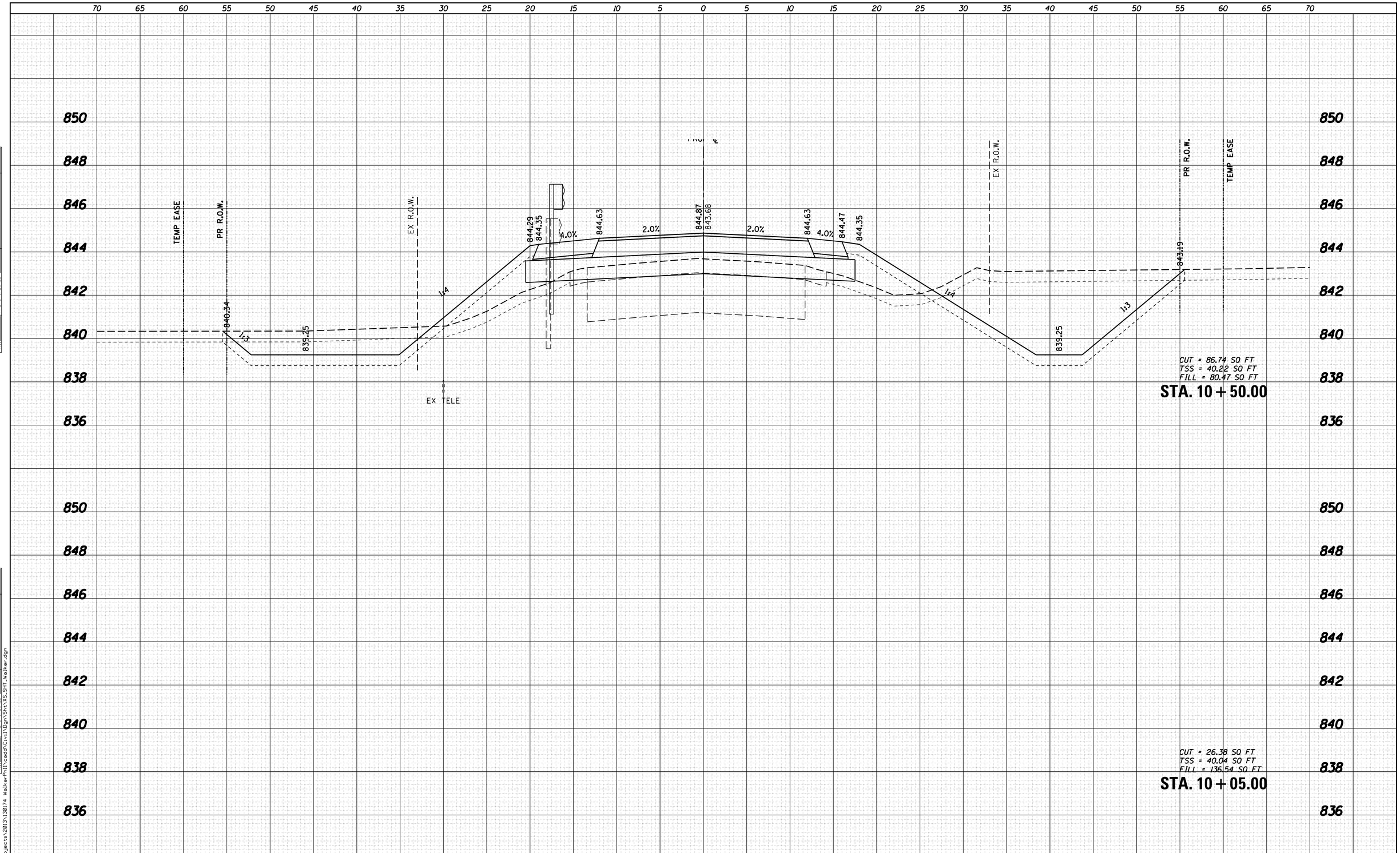

FINAL SURVEY	BY	DATE
SURVEYED		
PLOTTED		
TEMPLATE		
AREAS		
AREAS CHECKED		
NOTE BOOK NO.		

ORIGINAL SURVEY	BY	DATE
SURVEYED		
PLOTTED		
TEMPLATE		
AREAS		
AREAS CHECKED		
NOTE BOOK NO.		

FILE NAME = W:\Projects\2013\130174 WalkerPhil\cadd\Civil\Dgn\Sht\XS_SHT_Walker.dgn

WILLS BURKE KELSEY ASSOCIATES LTD.
116 West Main Street, Suite 201
St. Charles, Illinois 60174

USER NAME = nparris	DESIGNED -	REVISED -
	DRAWN -	REVISED -
PLOT SCALE = 1:5	CHECKED -	REVISED -
PLOT DATE = 9/8/2014	DATE -	REVISED -

STATE OF ILLINOIS
DEPARTMENT OF TRANSPORTATION

CROSS SECTIONS
WALKER ROAD

SCALE: 5H:2V | SHEET NO. OF SHEETS | STA. 10+05.00 TO STA. 10+50.00

C.H. RTE.	SECTION	COUNTY	TOTAL SHEETS	SHEET NO.
46	08-00133-01-BR	KANE	87	82

CONTRACT NO.

ILLINOIS FED. AID PROJECT

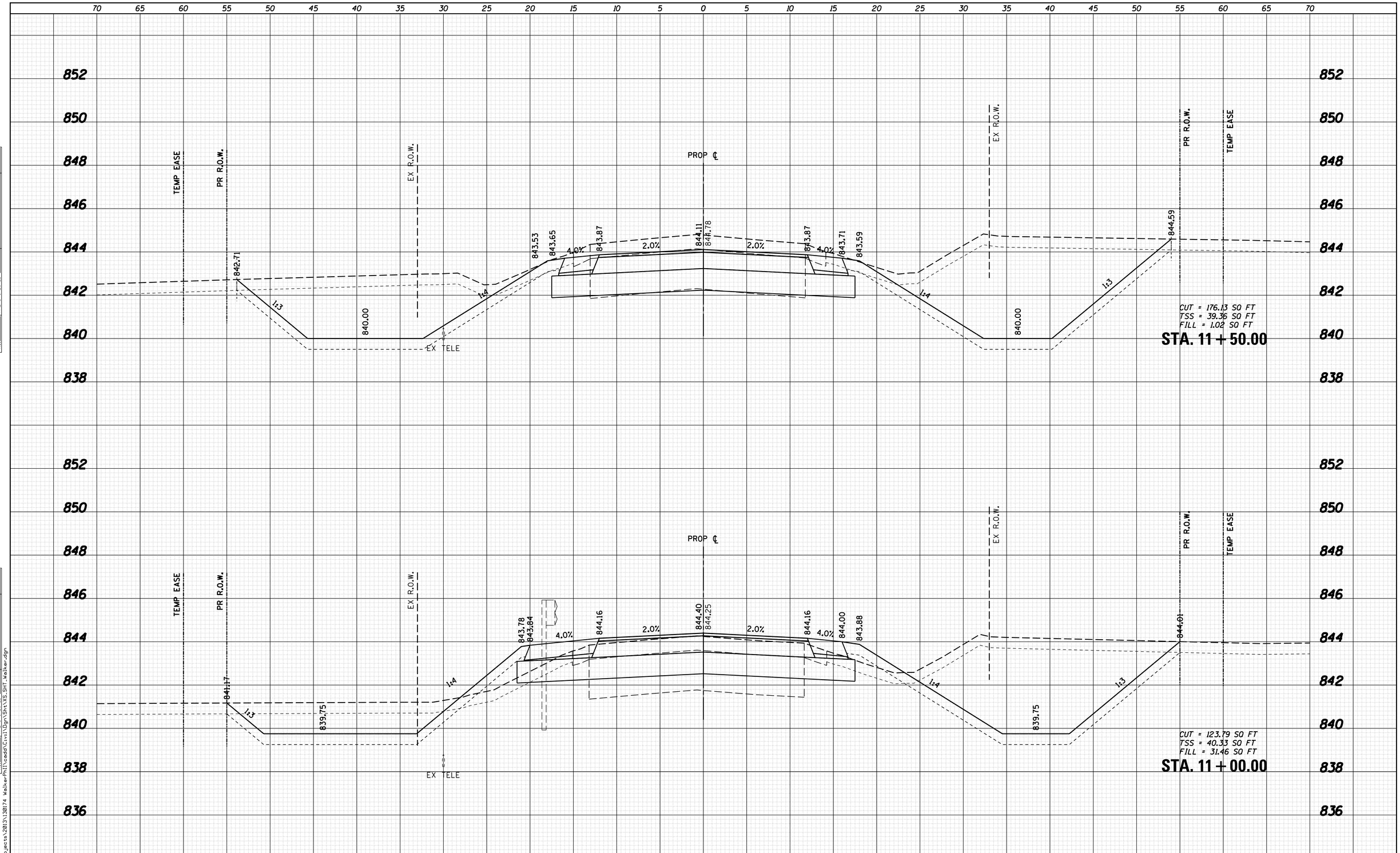

FINAL SURVEY	BY	DATE
SURVEYED		
PLOTTED		
TEMPLATE		
AREAS		
AREAS CHECKED		
NOTE BOOK NO.		

ORIGINAL SURVEY	BY	DATE
SURVEYED		
PLOTTED		
TEMPLATE		
AREAS		
AREAS CHECKED		
NOTE BOOK NO.		

FILE NAME = W:\Projects\2013\130174 WalkerPhII\cadd\Civil\Dgn\Sht\XS_SHT_walker.dgn

WILLS BURKE KELSEY ASSOCIATES LTD.
116 West Main Street, Suite 201
St. Charles, Illinois 60174

USER NAME = nparris	DESIGNED -	REVISED -
	DRAWN -	REVISED -
PLOT SCALE = 1:5	CHECKED -	REVISED -
PLOT DATE = 9/8/2014	DATE -	REVISED -

STATE OF ILLINOIS
DEPARTMENT OF TRANSPORTATION

CROSS SECTIONS
WALKER ROAD

SCALE: 5H:2V | SHEET NO. OF SHEETS | STA. 11+00.00 TO STA. 11+50.00

C.H. RTE.	SECTION	COUNTY	TOTAL SHEETS	SHEET NO.
46	08-00133-01-BR	KANE	87	83

CONTRACT NO.

ILLINOIS FED. AID PROJECT

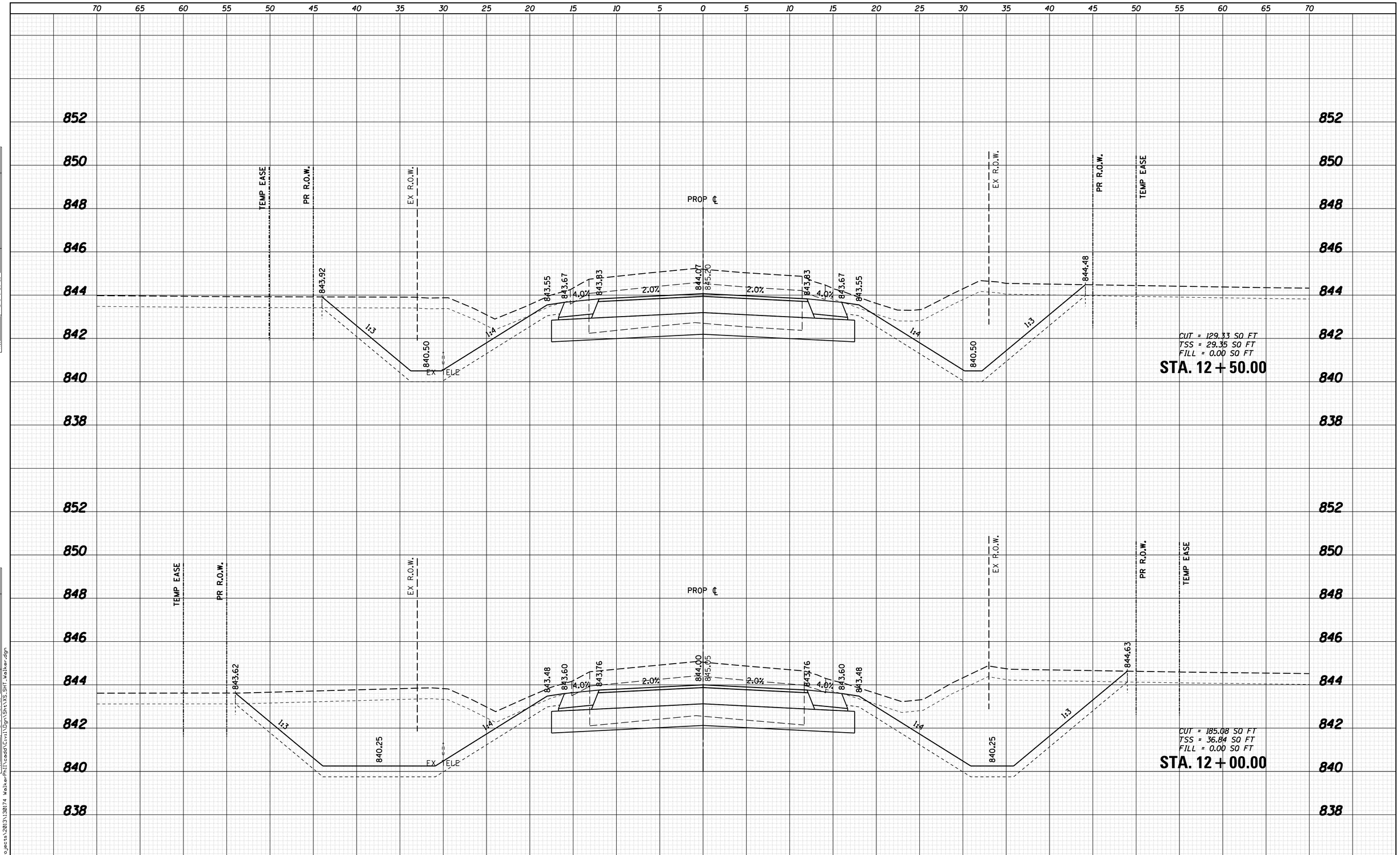

FINAL SURVEY	BY	DATE
SURVEYED		
PLOTTED		
TEMPLATE		
AREAS		
AREAS CHECKED		
NOTE BOOK NO.		

ORIGINAL SURVEY	BY	DATE
SURVEYED		
PLOTTED		
TEMPLATE		
AREAS		
AREAS CHECKED		
NOTE BOOK NO.		

FILE NAME = W:\Projects\2013\130174 WalkerPhil\cadd\Civil\Dgn\Sht\XS_SHT_walker.dgn

WILLS BURKE KELSEY ASSOCIATES LTD.
116 West Main Street, Suite 201
St. Charles, Illinois 60174

USER NAME = nparris	DESIGNED -	REVISED -
	DRAWN -	REVISED -
PLOT SCALE = 1:5	CHECKED -	REVISED -
PLOT DATE = 9/8/2014	DATE -	REVISED -

STATE OF ILLINOIS
DEPARTMENT OF TRANSPORTATION

CROSS SECTIONS
WALKER ROAD

SCALE: 5H:2V | SHEET NO. OF SHEETS | STA. 12+00.00 TO STA. 12+50.00

C.H. RTE.	SECTION	COUNTY	TOTAL SHEETS	SHEET NO.
46	08-00133-01-BR	KANE	87	84

CONTRACT NO.

ILLINOIS FED. AID PROJECT

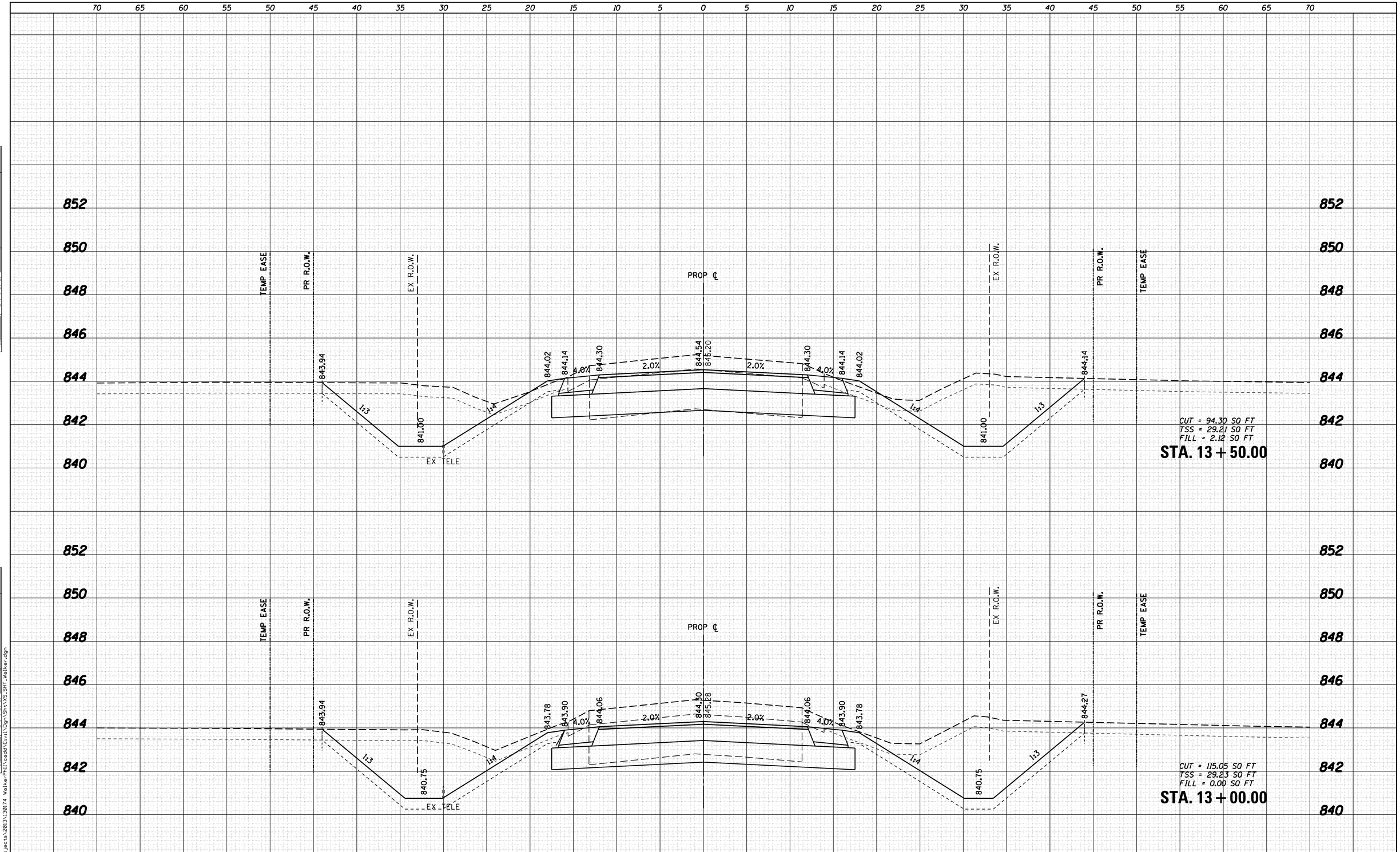

FINAL SURVEY		BY	DATE
NOTE BOOK	SURVEYED		
	PLOTTED		
	TEMPLATE		
	AREAS		
NO.	AREAS CHECKED		

ORIGINAL SURVEY		BY	DATE
NOTE BOOK	SURVEYED		
	PLOTTED		
	TEMPLATE		
	AREAS		
NO.	AREAS CHECKED		

FILE NAME = W:\Projects\2013\130174 Walker\Phl\cadd\Civil\Dgn\Sht\XS_SHT_Walker.dgn

WILLS BURKE KELSEY ASSOCIATES LTD.
116 West Main Street, Suite 201
St. Charles, Illinois 60174

USER NAME = nparris	DESIGNED -	REVISED -
	DRAWN -	REVISED -
PLOT SCALE = 1:5	CHECKED -	REVISED -
PLOT DATE = 9/8/2014	DATE -	REVISED -

STATE OF ILLINOIS
DEPARTMENT OF TRANSPORTATION

CROSS SECTIONS
WALKER ROAD

SCALE: 5H:2V | SHEET NO. OF SHEETS | STA. 13+00.00 TO STA. 13+50.00

C.H. RTE.	SECTION	COUNTY	TOTAL SHEETS	SHEET NO.
46	08-00133-01-BR	KANE	87	85

CONTRACT NO.

ILLINOIS | FED. AID PROJECT

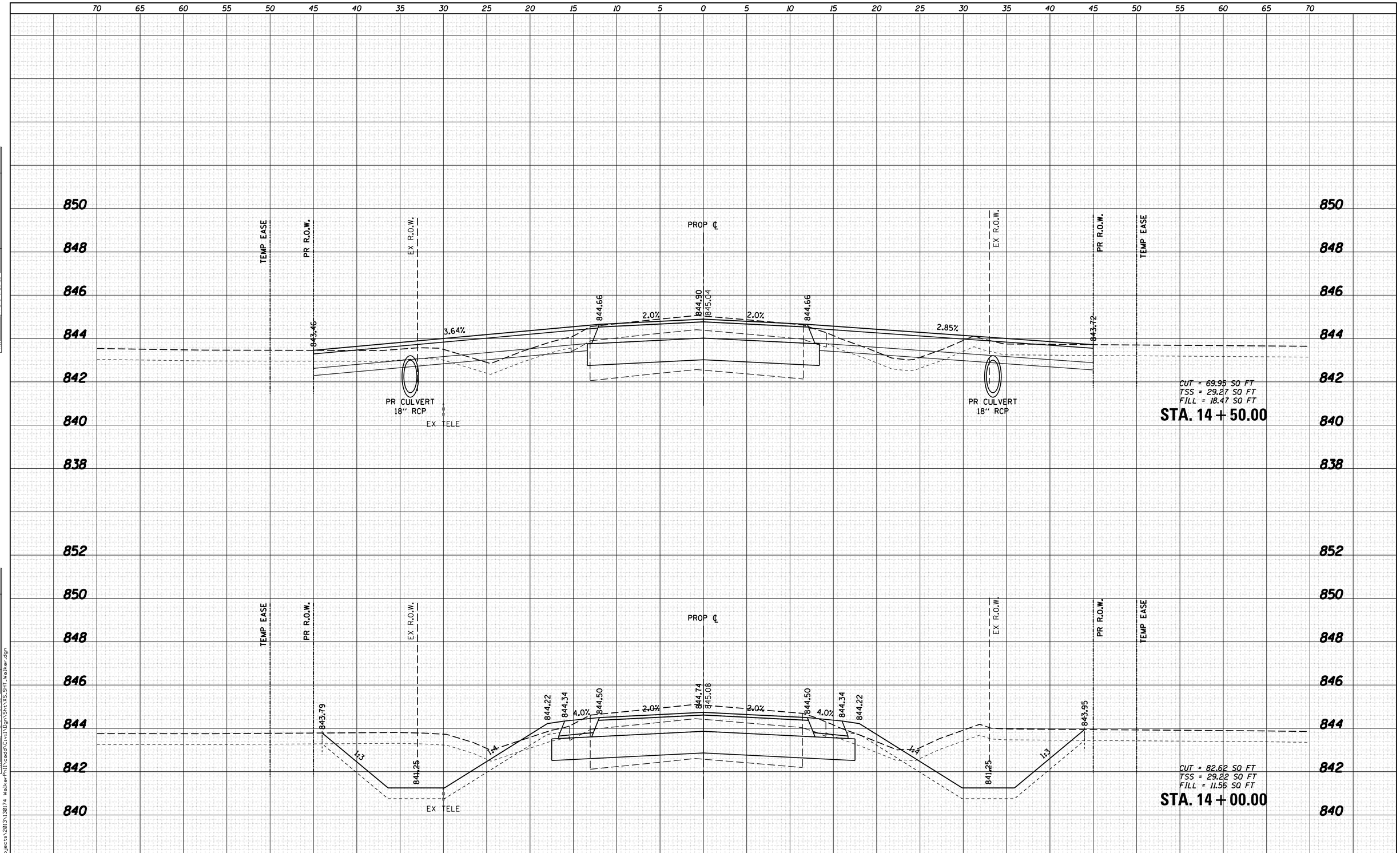

FINAL SURVEY	BY	DATE
SURVEYED		
PLOTTED		
TEMPLATE		
AREAS		
AREAS CHECKED		
NOTE BOOK NO.		

ORIGINAL SURVEY	BY	DATE
SURVEYED		
PLOTTED		
TEMPLATE		
AREAS		
AREAS CHECKED		
NOTE BOOK NO.		

FILE NAME = W:\Projects\2013\130174 WalkerPhil\cadd\Civil\Dgn\Sht\XS_SHT_walker.dgn

WILLS BURKE KELSEY ASSOCIATES LTD.
116 West Main Street, Suite 201
St. Charles, Illinois 60174

USER NAME = nparris	DESIGNED -	REVISED -
	DRAWN -	REVISED -
PLOT SCALE = 1:5	CHECKED -	REVISED -
PLOT DATE = 9/8/2014	DATE -	REVISED -

STATE OF ILLINOIS
DEPARTMENT OF TRANSPORTATION

CROSS SECTIONS
WALKER ROAD

SCALE: 5H:2V | SHEET NO. OF SHEETS | STA. 14+00.00 TO STA. 14+50.00

C.H. RTE.	SECTION	COUNTY	TOTAL SHEETS	SHEET NO.
46	08-00133-01-BR	KANE	87	86

CONTRACT NO.

ILLINOIS FED. AID PROJECT

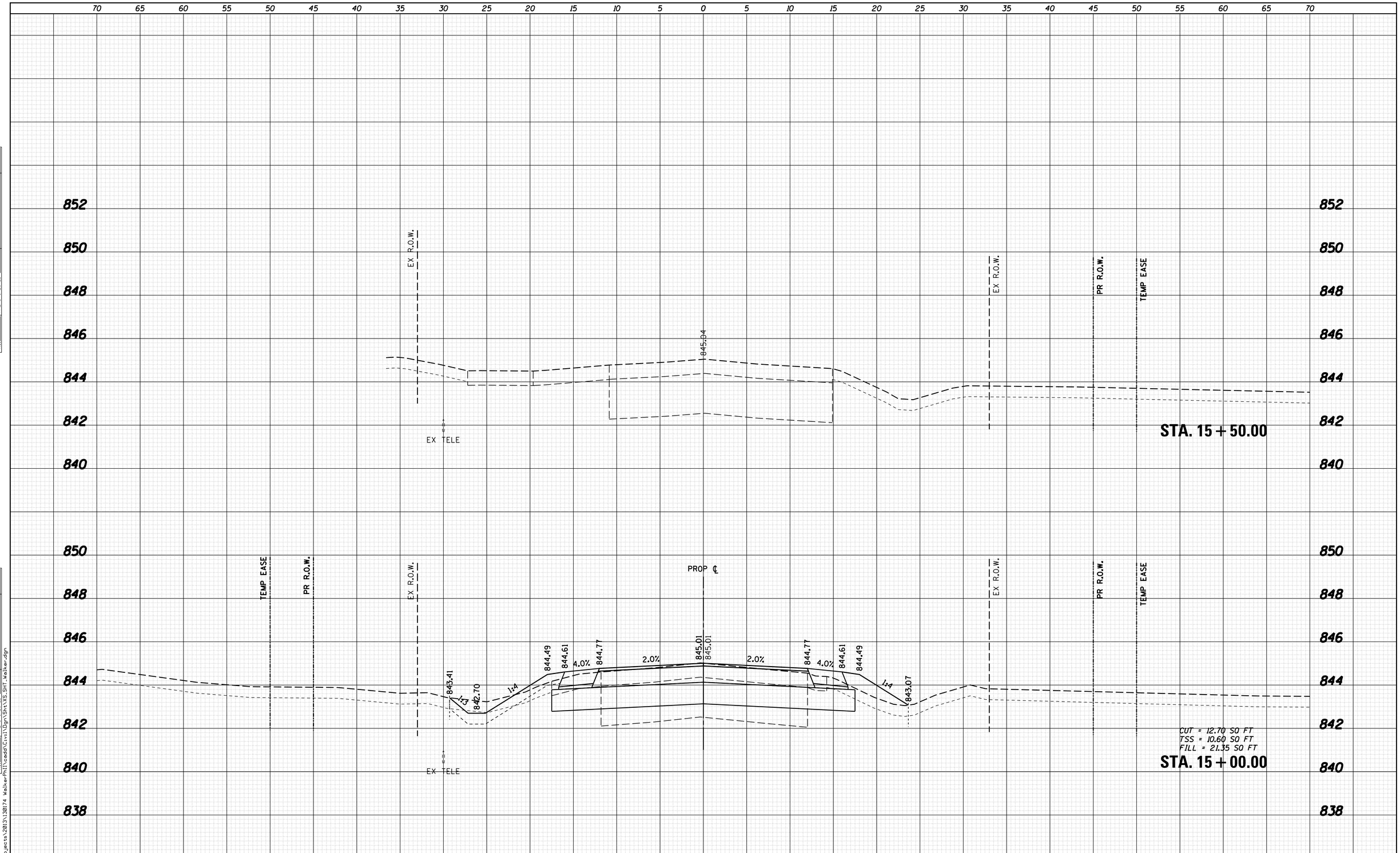

FINAL SURVEY		BY	DATE
	SURVEYED		
	PLOTTED		
	TEMPLATE		
NOTE BOOK	AREAS		
	AREAS		
NO.	AREAS CHECKED		

ORIGINAL SURVEY		BY	DATE
	SURVEYED		
	PLOTTED		
	TEMPLATE		
NOTE BOOK	AREAS		
	AREAS		
NO.	AREAS CHECKED		

FILE NAME = W:\Projects\2013\130174 WalkerPhil\cadd\Civil\Dgn\Sht\XS_SHT_walker.dgn

WILLS BURKE KELSEY ASSOCIATES LTD.
116 West Main Street, Suite 201
St. Charles, Illinois 60174

USER NAME = nparris	DESIGNED -	REVISED -
	DRAWN -	REVISED -
PLOT SCALE = 1:5	CHECKED -	REVISED -
PLOT DATE = 9/8/2014	DATE -	REVISED -

STATE OF ILLINOIS
DEPARTMENT OF TRANSPORTATION

CROSS SECTIONS
WALKER ROAD

SCALE: 5H:2V | SHEET NO. OF SHEETS | STA. 15+00.00 TO STA. 15+50.00

C.H. RTE.	SECTION	COUNTY	TOTAL SHEETS	SHEET NO.
46	08-00133-01-BR	KANE	87	87

CONTRACT NO.

ILLINOIS FED. AID PROJECT